Compal Confidential

NAWE5 Schematics Document

AMD Danube

Champlain Processor with RS880M/SB820/Park VGA

2010-04-29

LA5753 REV: 1.A

Security Classification	Compal Secret Data			Compal Electronics, Inc.
Issued Date	2008/10/06	Deciphered Date	2010/04/30	Title: Cover Page
THIS SHEET OF ENGINEERING DRAWING IS THE PROPRIETARY PROPERTY OF COMPAL ELECTRONICS, INC. AND CONTAINS CONFIDENTIAL AND TRADE SECRET INFORMATION. THIS SHEET MAY NOT BE TRANSFERED FROM THE CUSTODY OF THE COMPETENT DIVISION OF R&D DEPARTMENT EXCEPT AS AUTHORIZED BY COMPAL ELECTRONICS, INC. NEITHER THIS SHEET NOR THE INFORMATION IT CONTAINS MAY BE USED BY OR DISCLOSED TO ANY THIRD PARTY WITHOUT PRIOR WRITTEN CONSENT OF COMPAL ELECTRONICS, INC.				Size: B / Document Number: NAWE5 LA-5753P / Rev: 1.A
				Date: Tuesday, May 18, 2010 / Sheet 1 of 48

WWW.AliSaler.Com

Compal Confidential

Model Name : AMD Danube + Park

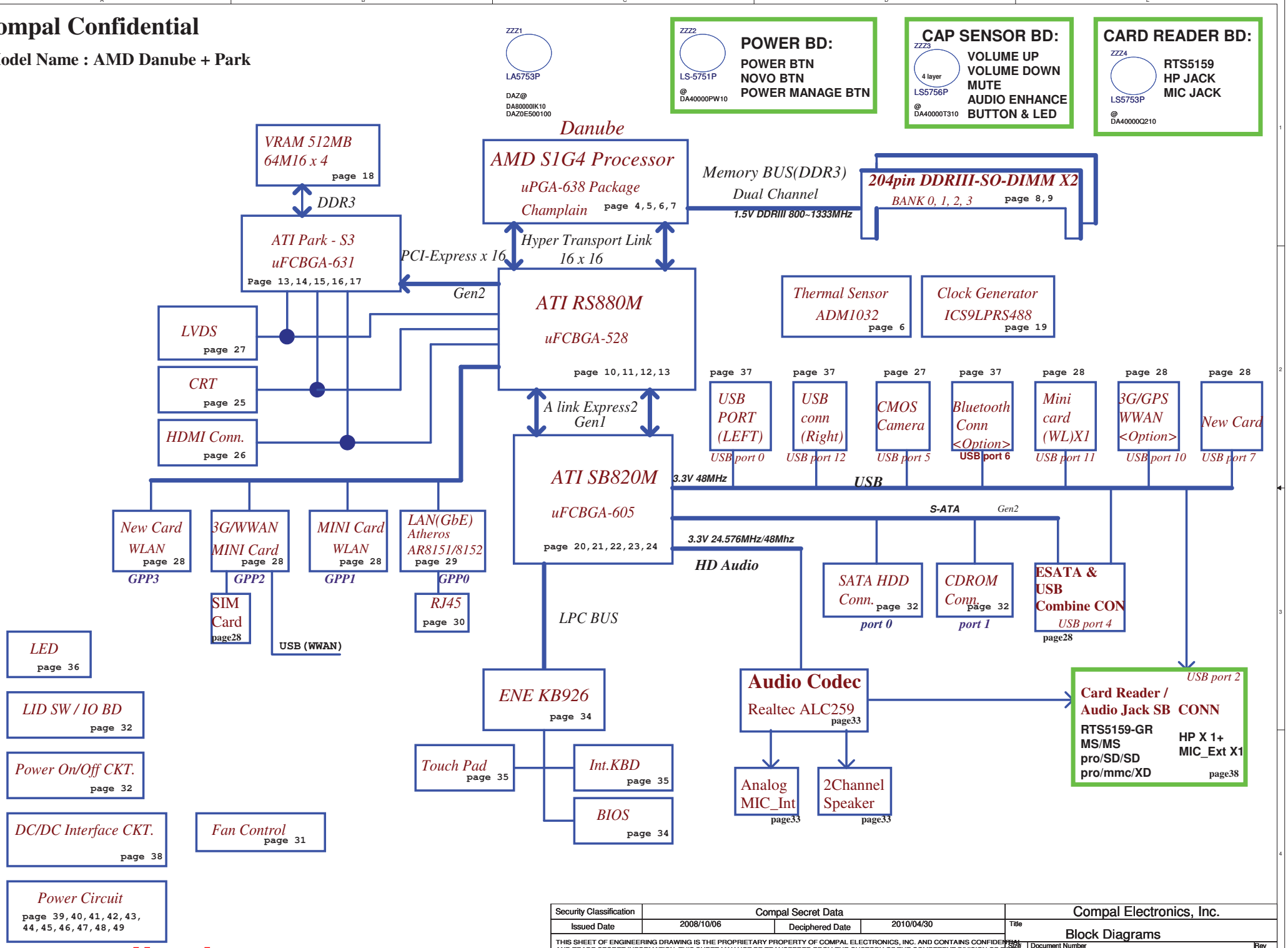

Security Classification	Compal Secret Data		Compal Electronics, Inc.
Issued Date	2008/10/06	Deciphered Date 2010/04/30	Title: Block Diagrams
THIS SHEET OF ENGINEERING DRAWING IS THE PROPRIETARY PROPERTY OF COMPAL ELECTRONICS, INC. AND CONTAINS CONFIDENTIAL AND TRADE SECRET INFORMATION. THIS SHEET MAY NOT BE TRANSFERED FROM THE CUSTODY OF THE COMPETENT DIVISION OF R&D DEPARTMENT EXCEPT AS AUTHORIZED BY COMPAL ELECTRONICS, INC. NEITHER THIS SHEET NOR THE INFORMATION IT CONTAINS MAY BE USED BY OR DISCLOSED TO ANY THIRD PARTY WITHOUT PRIOR WRITTEN CONSENT OF COMPAL ELECTRONICS, INC.			Size: B · Document Number: NAWE5 LA-5753P · Rev: 1.A
			Date: Tuesday, May 18, 2010 · Sheet 2 of 48

WWW.AliSaler.Com

Voltage Rails

Power Plane	Description	S1	S3	S5
VIN	Adapter power supply (19V)	N/A	N/A	N/A
B+	AC or battery power rail for power circuit.	N/A	N/A	N/A
+CPU_CORE_0	Core voltage for CPU (0.7-1.2V)	ON	OFF	OFF
+CPU_CORE_1	Core voltage for CPU (0.7-1.2V)	ON	OFF	OFF
+CPU_CORE_NB	Voltage for On-die Northbridge of CPU(0.8-1.1V)	ON	OFF	OFF
+0.75VS	+0.75VS LDO power rail for DDR3 VTT	ON	ON	OFF
+1.1VS	1.1V switched power rail for NB VDDC & VGA	ON	OFF	OFF
+VGA_CORE	0.95-1.2V switched power rail	ON	OFF	OFF
+1.5VS	1.5V power rail for PCIE Card	ON	OFF	OFF
+1.5V	1.5V power rail for CPU VDDIO and DDR	ON	ON	OFF
+1.8VS	1.8V switched power rail	ON	OFF	OFF
+2.5VS	2.5V for CPU_VDDA	ON	OFF	OFF
+3VALW	3.3V always on power rail	ON	ON	ON*
+3V_LAN	3.3V power rail for LAN	ON	ON	ON
+3VS	3.3V switched power rail	ON	OFF	OFF
+5VALW	5V always on power rail	ON	ON	ON*
+5VS	5V switched power rail	ON	OFF	OFF
+VSB	VSB always on power rail	ON	ON	ON*
+RTCVCC	RTC power	ON	ON	ON

Note : ON* means that this power plane is ON only with AC power available, otherwise it is OFF.

STATE \ SIGNAL	SLP_S1#	SLP_S3#	SLP_S4#	SLP_S5#	+VALW	+V	+VS	Clock
Full ON	HIGH	HIGH	HIGH	HIGH	ON	ON	ON	ON
S1(Power On Suspend)	LOW	HIGH	HIGH	HIGH	ON	ON	ON	LOW
S3 (Suspend to RAM)	LOW	LOW	HIGH	HIGH	ON	ON	OFF	OFF
S4 (Suspend to Disk)	LOW	LOW	LOW	HIGH	ON	OFF	OFF	OFF
S5 (Soft OFF)	LOW	LOW	LOW	LOW	ON	OFF	OFF	OFF

External PCI Devices

Device	IDSEL#	REQ#/GNT#	Interrupts

EC SM Bus1 address

Device	Address	HEX
Smart Battery	0001 011X b	16H

EC SM Bus2 address

Device	Address	HEX
EMC1402-1 (CPU)	100_1100b	4CH
EMC1412-A (GPU)	111_1100b	7CH
TMP411C (GPU)	100_1110b	4EH
EMC1403-2 (DDR,WWAN)	100_1101b	4DH

SB820 SM Bus 0 address

Device	Address	HEX
Clock Generator (SILEGO SLG8SP626)	1101 001Xb	D2
DDR DIMM1	1001 000Xb	90
DDR DIMM2	1001 010Xb	94

SB820 SM Bus 1 address

Device	Address

BOM Config

EXT CLK Mode:EXT@
INT CLK mode:INT@
UMA only SKU: UMA@
DIS ONLY (Park S3): DIS@
LAN GIGA: 8151@
CMOS@
BT@
3G@
S@
H@
LAN 100: 8152@
ESATA@
HDMI@+HDMI_UMA@
HDMI@+HDMI_DIS@
Express Card: EXP@
KB_LED: E7@

WWW.AliSaler.Com

Security Classification	Compal Secret Data		Compal Electronics, Inc.
Issued Date	2008/10/06	Deciphered Date 2010/04/30	Title: Notes List

THIS SHEET OF ENGINEERING DRAWING IS THE PROPRIETARY PROPERTY OF COMPAL ELECTRONICS, INC. AND CONTAINS CONFIDENTIAL AND TRADE SECRET INFORMATION. THIS SHEET MAY NOT BE TRANSFERED FROM THE CUSTODY OF THE COMPETENT DIVISION OF R&D DEPARTMENT EXCEPT AS AUTHORIZED BY COMPAL ELECTRONICS, INC. NEITHER THIS SHEET NOR THE INFORMATION IT CONTAINS MAY BE USED BY OR DISCLOSED TO ANY THIRD PARTY WITHOUT PRIOR WRITTEN CONSENT OF COMPAL ELECTRONICS, INC.

Size	Document Number	Rev
B	NAWE5 LA-5753P	1.A

Date: Tuesday, May 18, 2010 Sheet 3 of 48

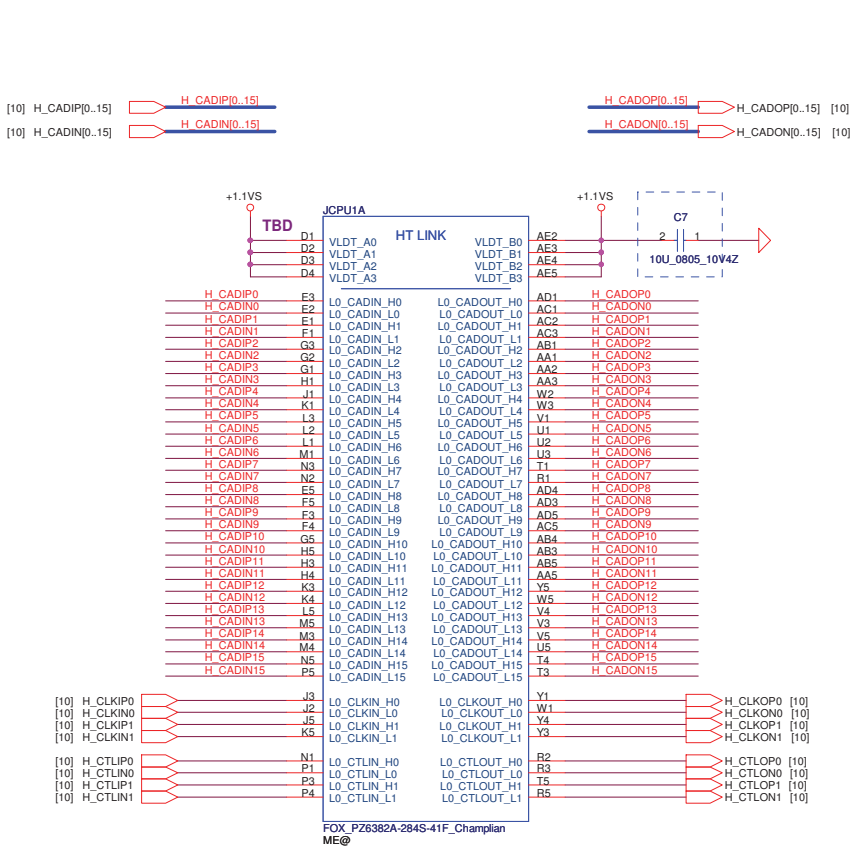

VLDT CAP.

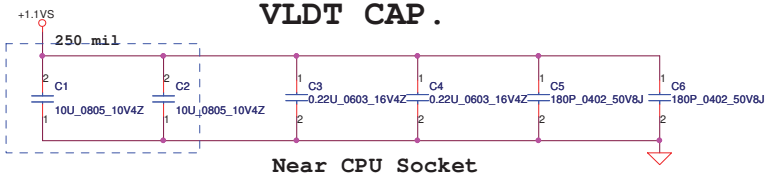

Security Classification	Compal Secret Data			Compal Electronics, Inc.
Issued Date	2008/10/06	Deciphered Date	2010/04/30	Title: AMD CPU S1G4 HT I/F
				Size: Custom; Document Number: NAWE5 LA-5753P; Rev: 1.A
				Date: Tuesday, May 18, 2010; Sheet 4 of 48

THIS SHEET OF ENGINEERING DRAWING IS THE PROPRIETARY PROPERTY OF COMPAL ELECTRONICS, INC. AND CONTAINS CONFIDENTIAL AND TRADE SECRET INFORMATION. THIS SHEET MAY NOT BE TRANSFERRED FROM THE CUSTODY OF THE COMPETENT DIVISION OF R&D DEPARTMENT EXCEPT AS AUTHORIZED BY COMPAL ELECTRONICS, INC. NEITHER THIS SHEET NOR THE INFORMATION IT CONTAINS MAY BE USED BY OR DISCLOSED TO ANY THIRD PARTY WITHOUT PRIOR WRITTEN CONSENT OF COMPAL ELECTRONICS, INC.

WWW.AliSaler.Com

Processor DDR3 Memory Interface

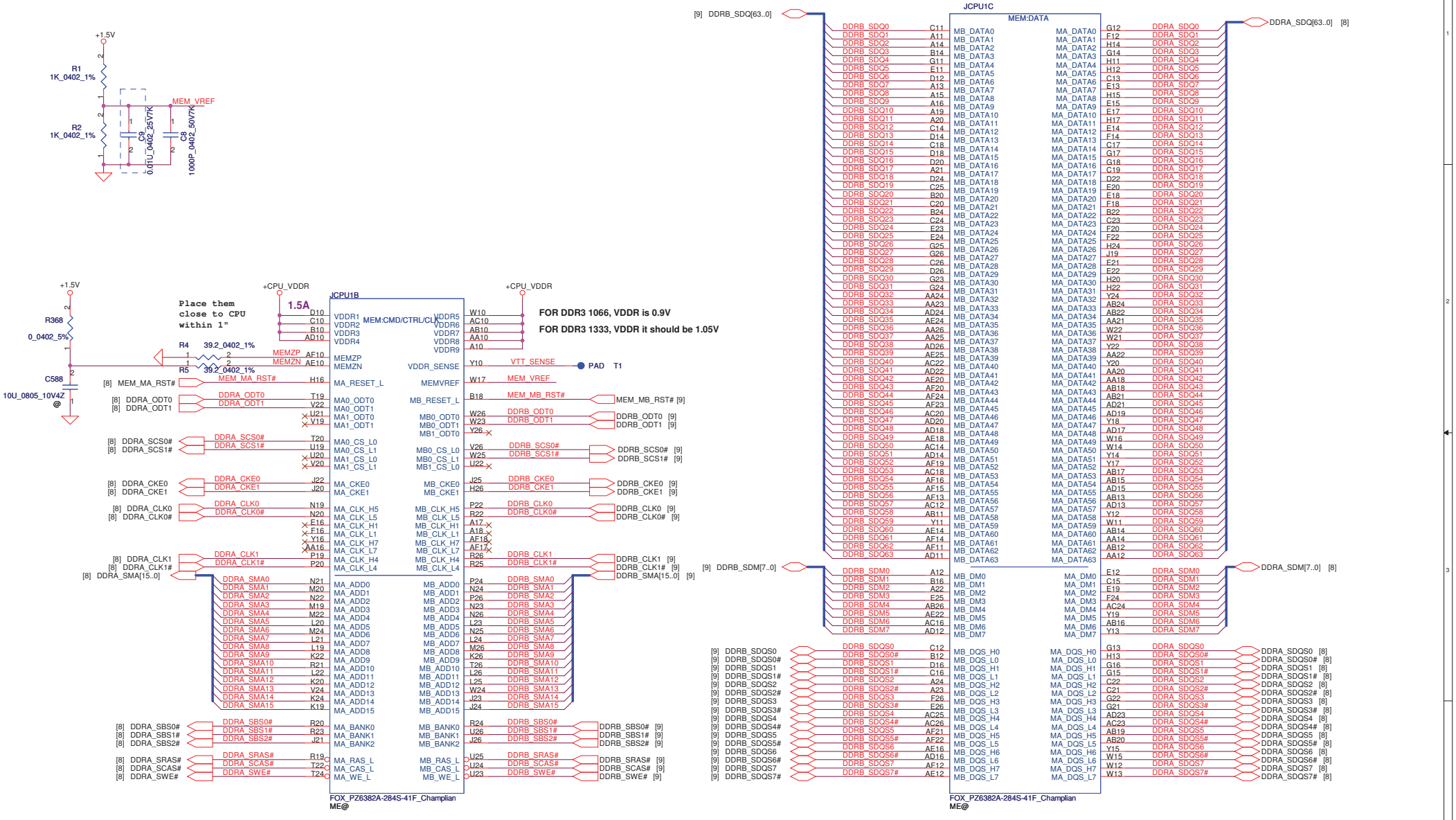

Security Classification	Compal Secret Data		
Issued Date	2008/10/06	Deciphered Date	2010/04/30

THIS SHEET OF ENGINEERING DRAWING IS THE PROPRIETARY PROPERTY OF COMPAL ELECTRONICS, INC. AND CONTAINS CONFIDENTIAL AND TRADE SECRET INFORMATION. THIS SHEET MAY NOT BE TRANSFERED FROM THE CUSTODY OF THE COMPETENT DIVISION OF R&D DEPARTMENT EXCEPT AS AUTHORIZED BY COMPAL ELECTRONICS, INC. NEITHER THIS SHEET NOR THE INFORMATION IT CONTAINS MAY BE USED BY OR DISCLOSED TO ANY THIRD PARTY WITHOUT PRIOR WRITTEN CONSENT OF COMPAL ELECTRONICS, INC.

Compal Electronics, Inc.

Title: AMD CPU S1G4 DDRII I/F

Size: Custom | Document Number: NAWE5 LA-5753P | Rev: 1.A

Date: Tuesday, May 18, 2010 | Sheet 5 of 48

WWW.AliSaler.Com

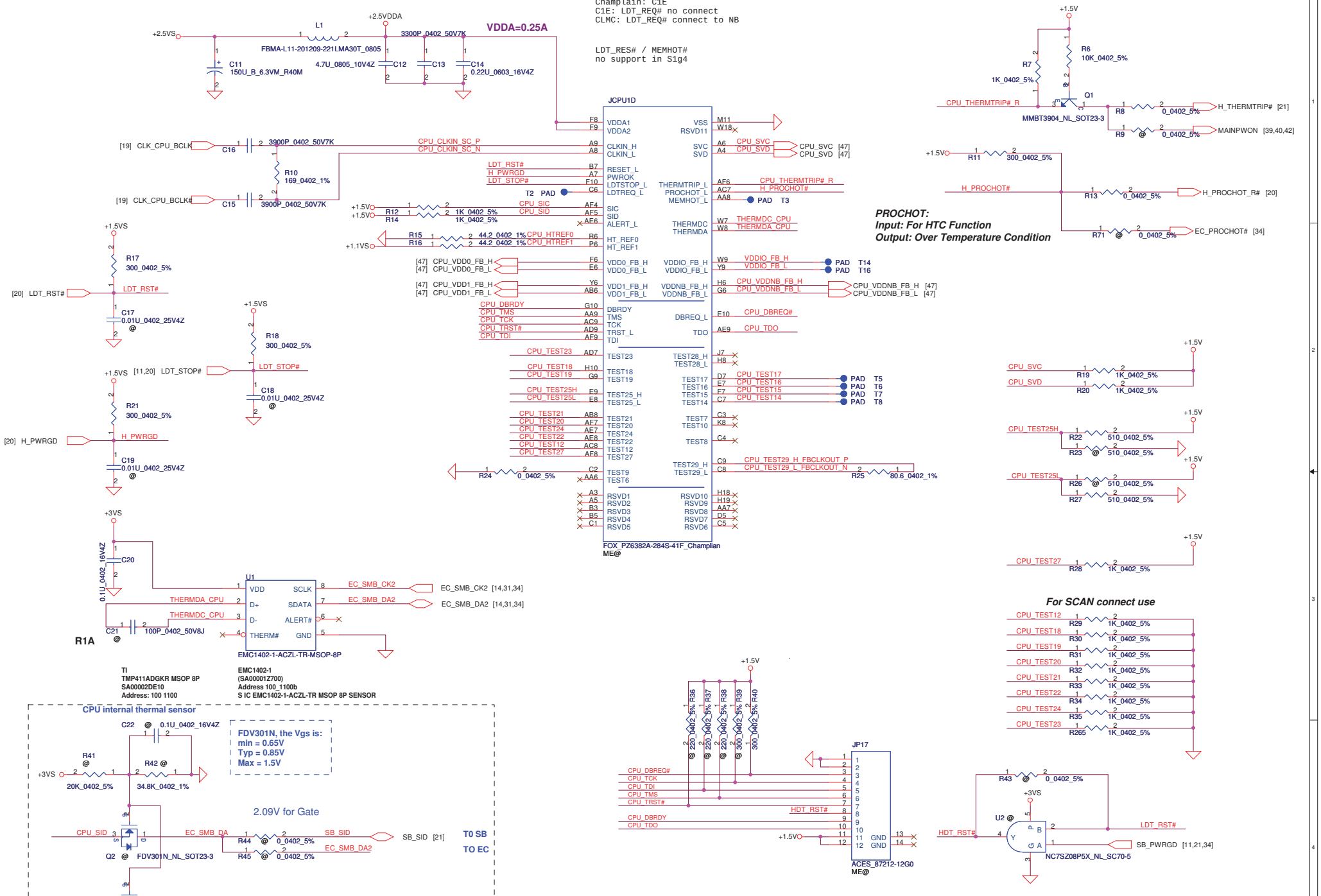

Security Classification	Compal Secret Data		
Issued Date	2008/10/06	Deciphered Date	2010/04/30

THIS SHEET OF ENGINEERING DRAWING IS THE PROPRIETARY PROPERTY OF COMPAL ELECTRONICS, INC. AND CONTAINS CONFIDENTIAL AND TRADE SECRET INFORMATION. THIS SHEET MAY NOT BE TRANSFERED FROM THE CUSTODY OF THE COMPETENT DIVISION OF R&D DEPARTMENT EXCEPT AS AUTHORIZED BY COMPAL ELECTRONICS, INC. NEITHER THIS SHEET NOR THE INFORMATION IT CONTAINS MAY BE USED BY OR DISCLOSED TO ANY THIRD PARTY WITHOUT PRIOR WRITTEN CONSENT OF COMPAL ELECTRONICS, INC.

Compal Electronics, Inc.

Title: AMD CPU S1G4 CTRL

Size: Custom | Document Number: NAWE5 LA-5753P | Rev: 1.A

Date: Tuesday, May 18, 2010 | Sheet 6 of 48

WWW.AliSaler.Com

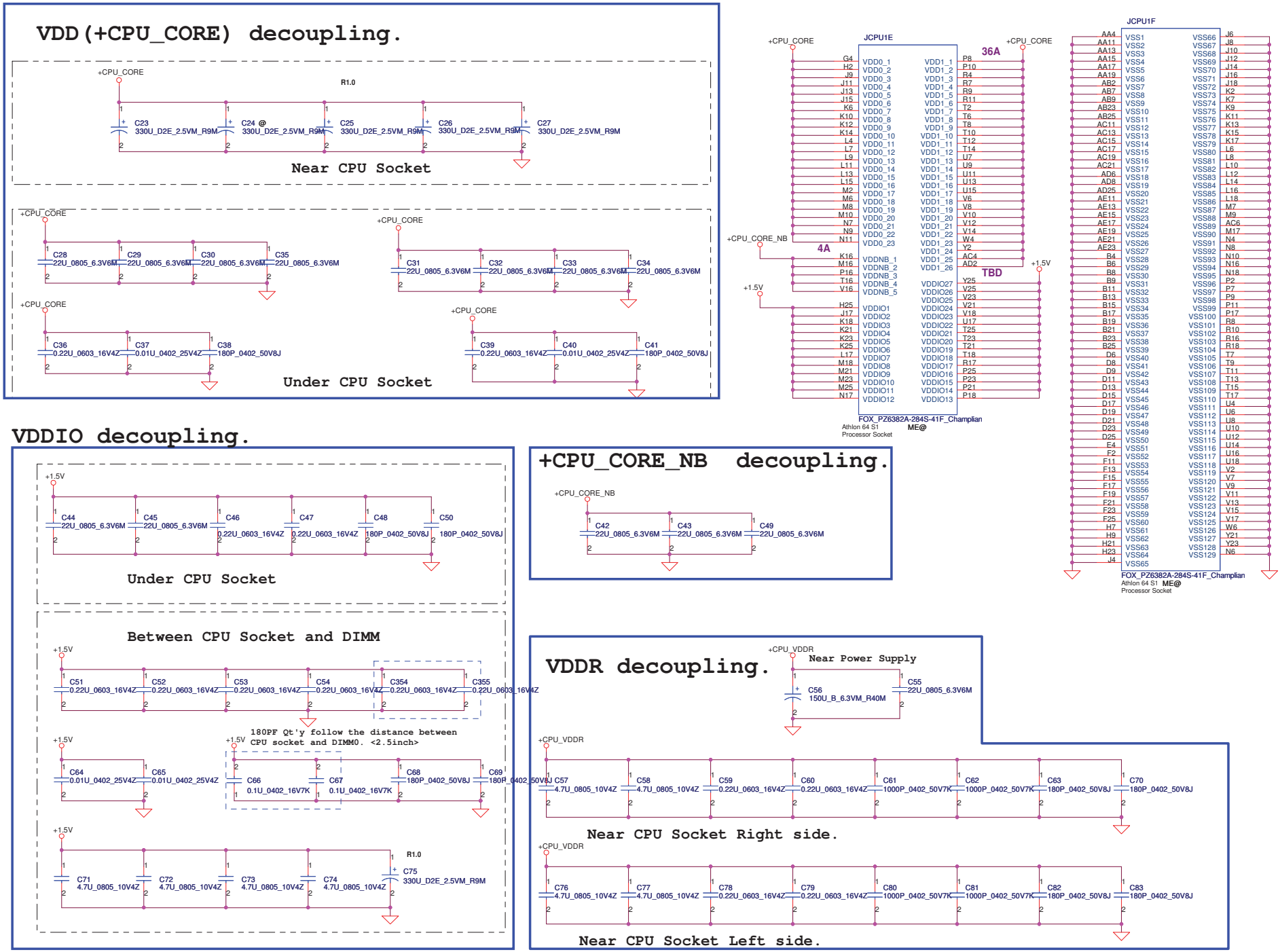

Security Classification	Compal Secret Data			Compal Electronics, Inc.
Issued Date	2008/10/06	Deciphered Date	2010/04/30	Title: AMD CPU S1G4 PWR & GND
THIS SHEET OF ENGINEERING DRAWING IS THE PROPRIETARY PROPERTY OF COMPAL ELECTRONICS, INC. AND CONTAINS CONFIDENTIAL AND TRADE SECRET INFORMATION. THIS SHEET MAY NOT BE TRANSFERED FROM THE CUSTODY OF THE COMPETENT DIVISION OF R&D DEPARTMENT EXCEPT AS AUTHORIZED BY COMPAL ELECTRONICS, INC. NEITHER THIS SHEET NOR THE INFORMATION IT CONTAINS MAY BE USED BY OR DISCLOSED TO ANY THIRD PARTY WITHOUT PRIOR WRITTEN CONSENT OF COMPAL ELECTRONICS, INC.				Size: B Custom; Document Number: NAWE5 LA-5753P; Rev: 1.A
				Date: Tuesday, May 18, 2010; Sheet 7 of 48

WWW.AliSaler.Com

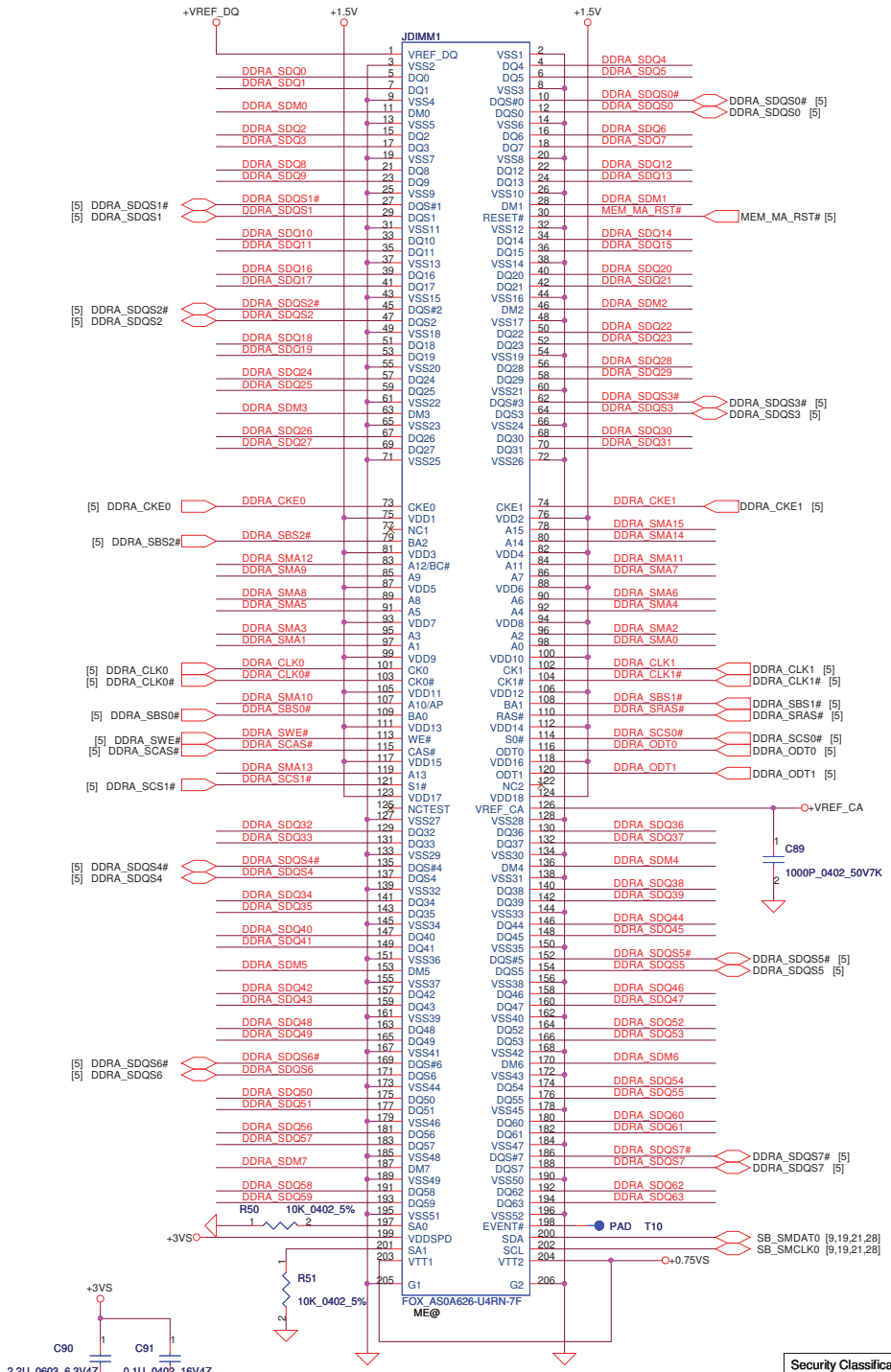

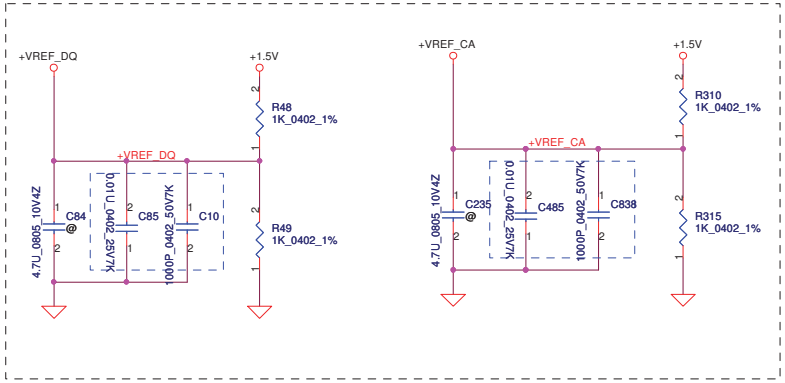

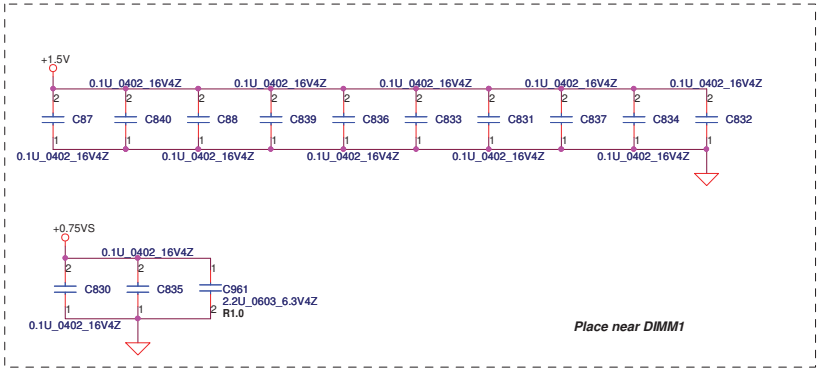

DIMM_A Rervse H:4mm

<Address: 00>

Security Classification	Compal Secret Data			Compal Electronics, Inc.
Issued Date	2008/10/06	Deciphered Date	2010/04/30	Title: DDRII SO-DIMM 1
				Size: Custom; Document Number: NAWE5 LA-5753P; Rev: 1.A
				Date: Tuesday, May 18, 2010; Sheet 8 of 48

THIS SHEET OF ENGINEERING DRAWING IS THE PROPRIETARY PROPERTY OF COMPAL ELECTRONICS, INC. AND CONTAINS CONFIDENTIAL AND TRADE SECRET INFORMATION. THIS SHEET MAY NOT BE TRANSFERED FROM THE CUSTODY OF THE COMPETENT DIVISION OF R&D DEPARTMENT EXCEPT AS AUTHORIZED BY COMPAL ELECTRONICS, INC. NEITHER THIS SHEET NOR THE INFORMATION IT CONTAINS MAY BE USED BY OR DISCLOSED TO ANY THIRD PARTY WITHOUT PRIOR WRITTEN CONSENT OF COMPAL ELECTRONICS, INC.

WWW.AliSaler.Com

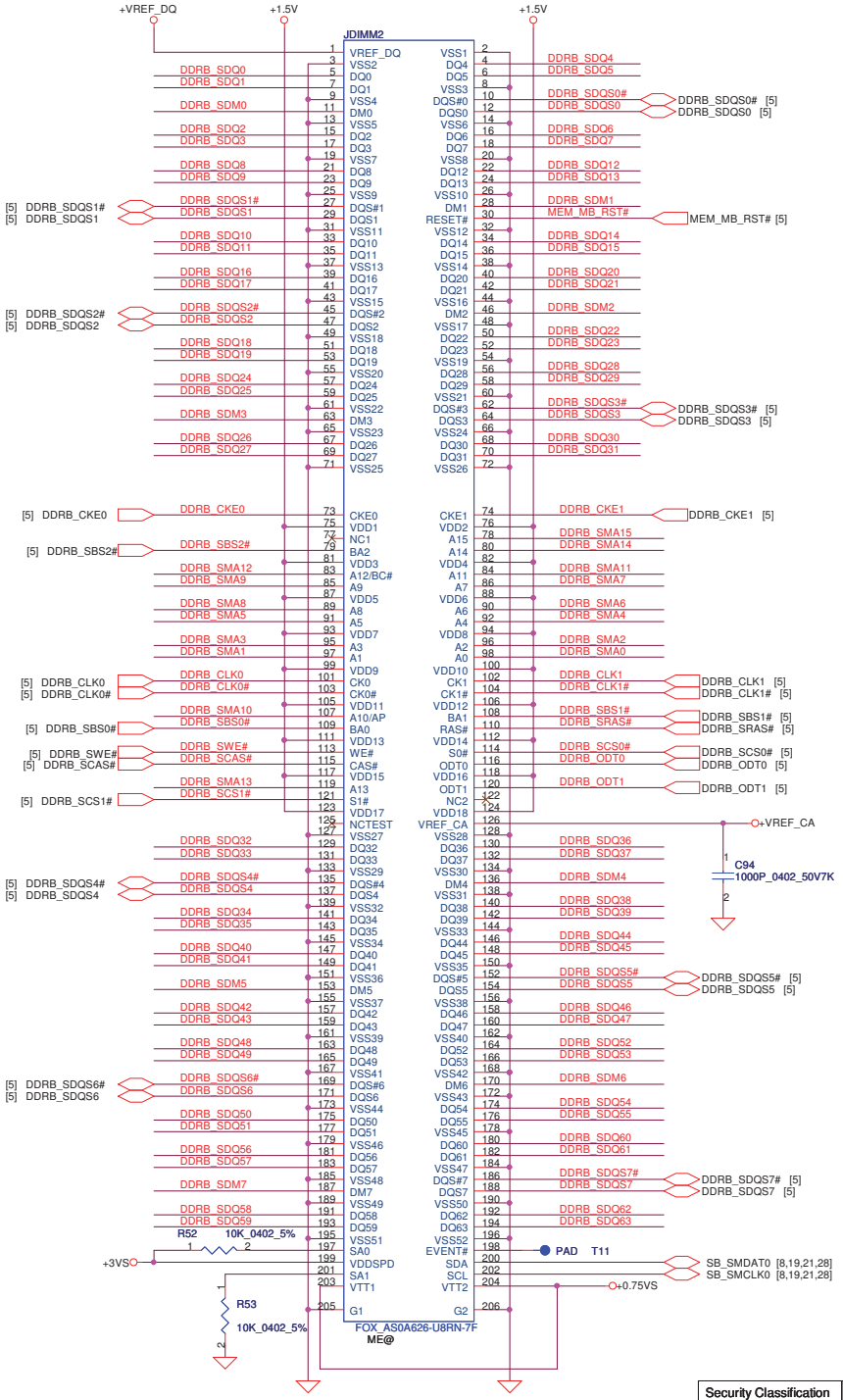

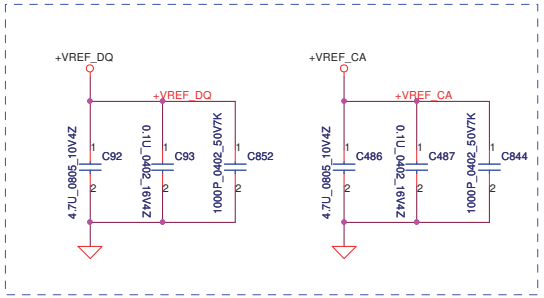

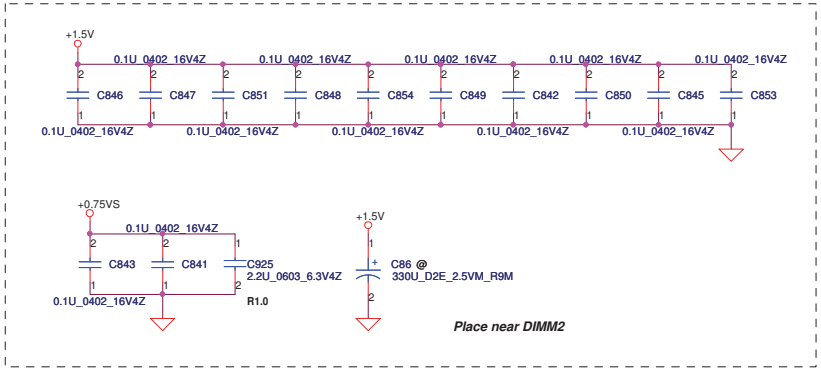

Security Classification	Compal Secret Data		
Issued Date	2008/10/06	Deciphered Date	2010/04/30

THIS SHEET OF ENGINEERING DRAWING IS THE PROPRIETARY PROPERTY OF COMPAL ELECTRONICS, INC. AND CONTAINS CONFIDENTIAL AND TRADE SECRET INFORMATION. THIS SHEET MAY NOT BE TRANSFERED FROM THE CUSTODY OF THE COMPETENT DIVISION OF R&D DEPARTMENT EXCEPT AS AUTHORIZED BY COMPAL ELECTRONICS, INC. NEITHER THIS SHEET NOR THE INFORMATION IT CONTAINS MAY BE USED BY OR DISCLOSED TO ANY THIRD PARTY WITHOUT PRIOR WRITTEN CONSENT OF COMPAL ELECTRONICS, INC.

Compal Electronics, Inc.

Title: DDRII SO-DIMM 2

Size: Custom | Document Number: NAWE5 LA-5753P | Rev: 1.A

Date: Tuesday, May 18, 2010 | Sheet 9 of 48

DIMM_B Reverse H:8mm

WWW.AliSaler.Com

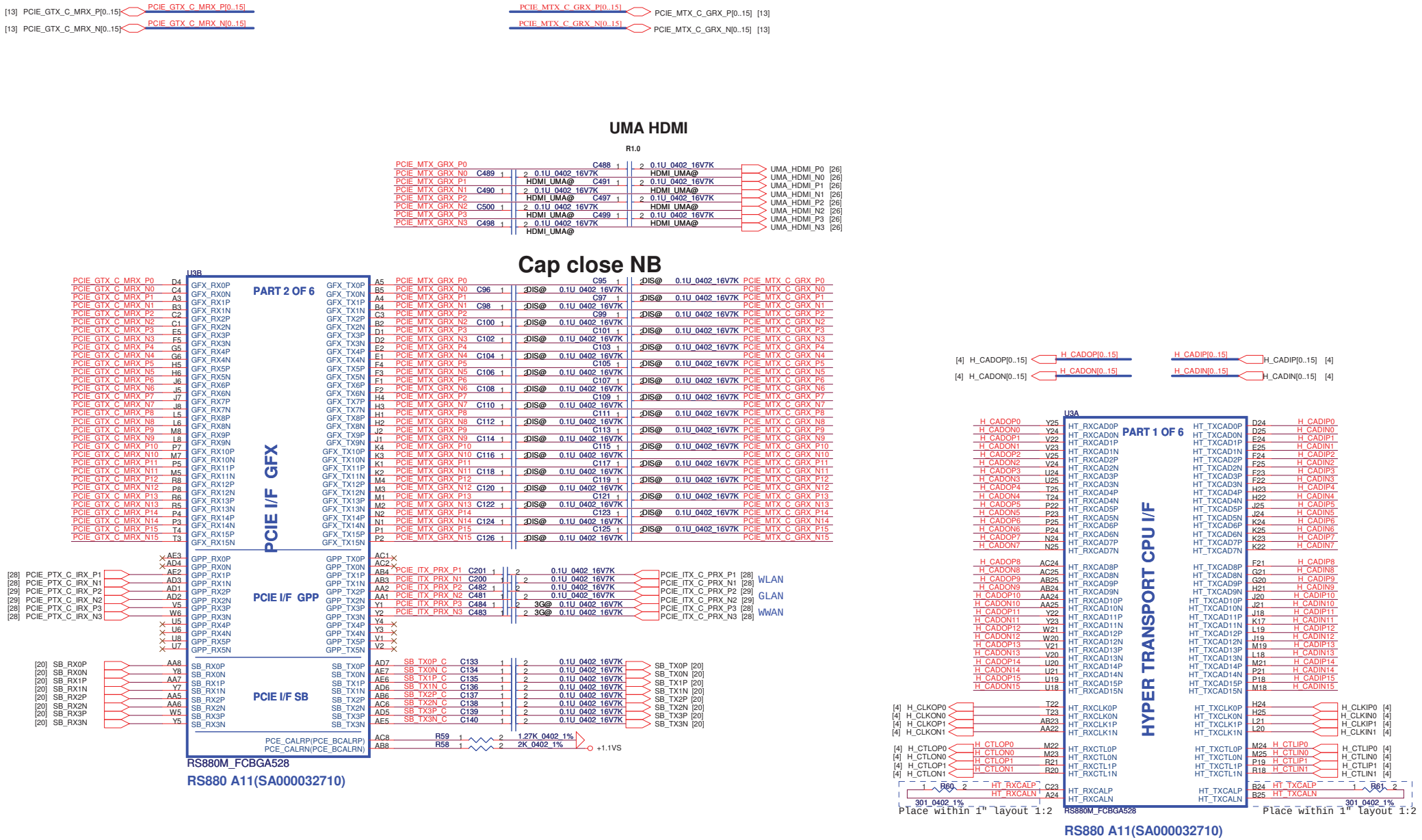

Security Classification	Compal Secret Data			Compal Electronics, Inc.
Issued Date	2008/10/06	Deciphered Date	2010/04/30	Title: RS880-HT/PCIE
THIS SHEET OF ENGINEERING DRAWING IS THE PROPRIETARY PROPERTY OF COMPAL ELECTRONICS, INC. AND CONTAINS CONFIDENTIAL AND TRADE SECRET INFORMATION. THIS SHEET MAY NOT BE TRANSFERED FROM THE CUSTODY OF THE COMPETENT DIVISION OF R&D DEPARTMENT EXCEPT AS AUTHORIZED BY COMPAL ELECTRONICS, INC. NEITHER THIS SHEET NOR THE INFORMATION IT CONTAINS MAY BE USED BY OR DISCLOSED TO ANY THIRD PARTY WITHOUT PRIOR WRITTEN CONSENT OF COMPAL ELECTRONICS, INC.				Size: B Custom; Document Number: NAWE5 LA-5753P; Rev: 1.A
				Date: Tuesday, May 18, 2010; Sheet 10 of 48

WWW.AliSaler.Com

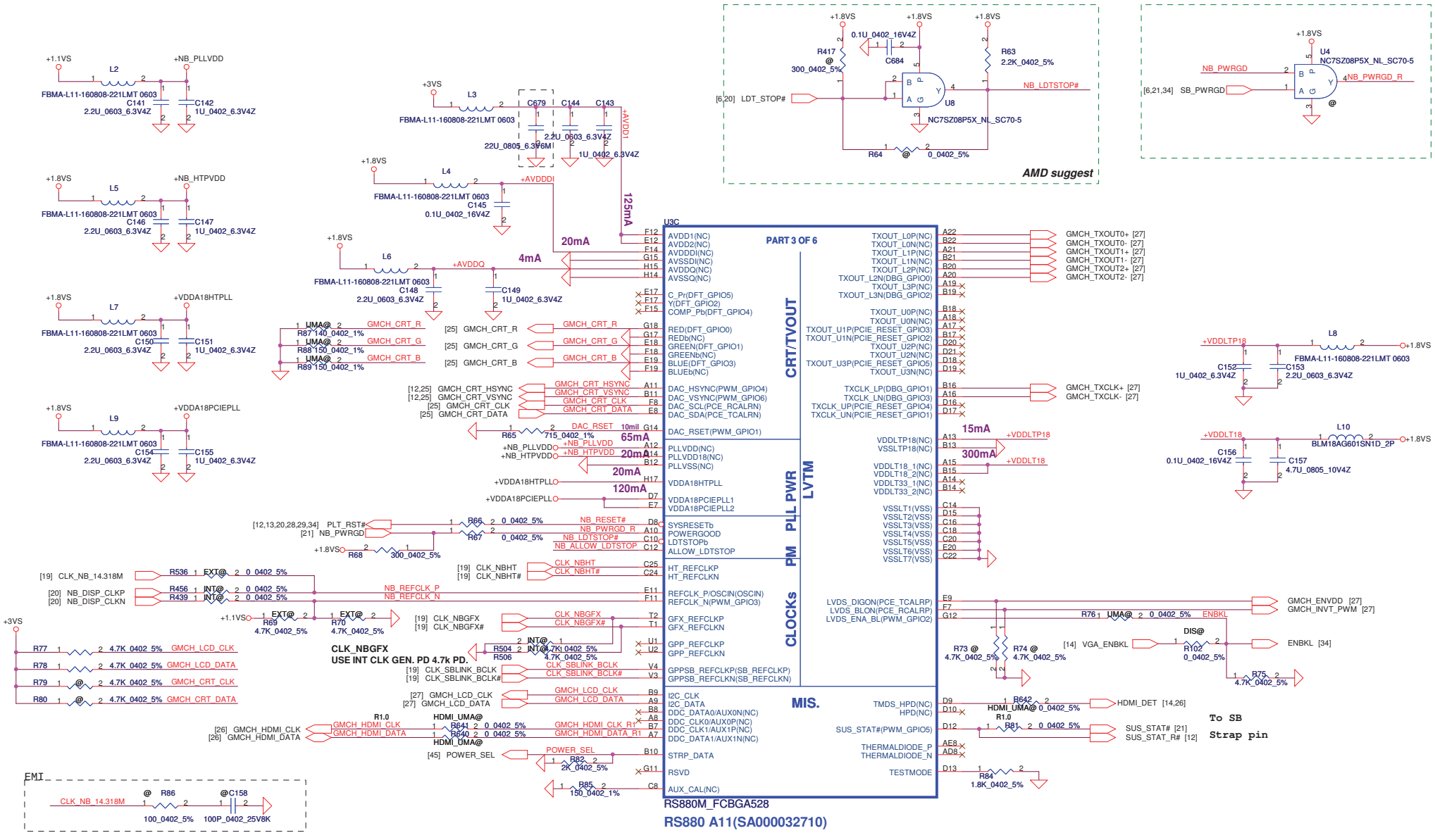

Security Classification	Compal Secret Data			Compal Electronics, Inc.
Issued Date	2008/10/06	Deciphered Date	2010/04/30	Title: RS880 VEDIO/CLK GEN
THIS SHEET OF ENGINEERING DRAWING IS THE PROPRIETARY PROPERTY OF COMPAL ELECTRONICS, INC. AND CONTAINS CONFIDENTIAL AND TRADE SECRET INFORMATION. THIS SHEET MAY NOT BE TRANSFERED FROM THE CUSTODY OF THE COMPETENT DIVISION OF R&D DEPARTMENT EXCEPT AS AUTHORIZED BY COMPAL ELECTRONICS, INC. NEITHER THIS SHEET NOR THE INFORMATION IT CONTAINS MAY BE USED BY OR DISCLOSED TO ANY THIRD PARTY WITHOUT PRIOR WRITTEN CONSENT OF COMPAL ELECTRONICS, INC.				Size: Custom / Document Number: NAWE5 LA-5753P / Rev: 1.A
				Date: Tuesday, May 18, 2010 / Sheet 11 of 48

WWW.AliSaler.Com

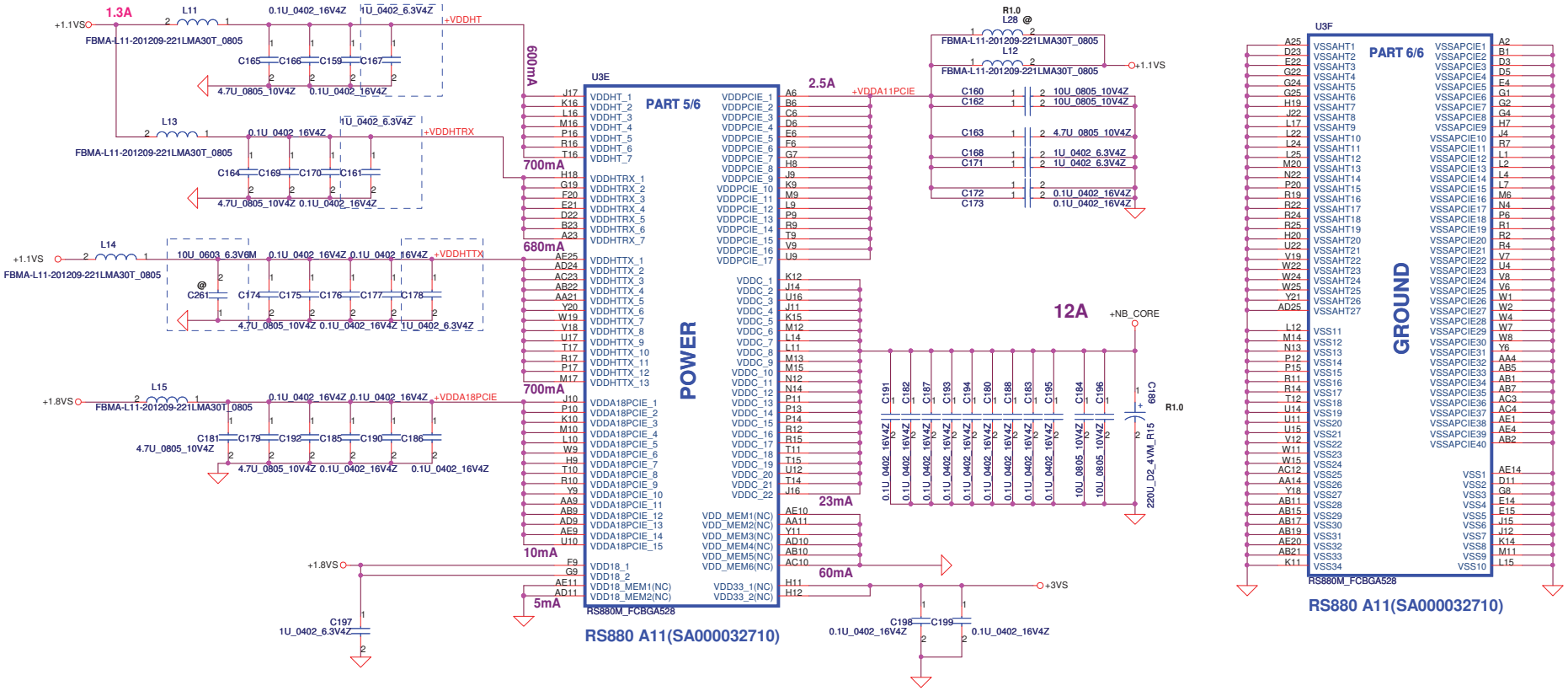

Side port and Strap setting

Debug Mode

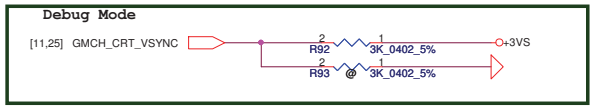

Load EEPROM Strap

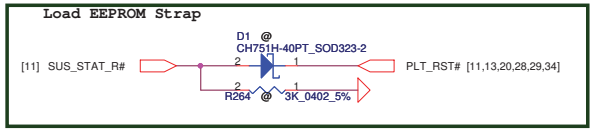

Enable Side Port Memory

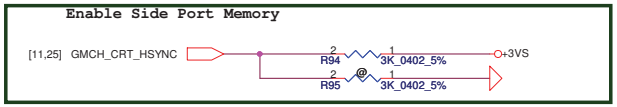

DFT_GPIO5:STRAP_DEBUG_BUS_GPIO_ENABLEb

```
Enables the Test Debug Bus using GPIO. (VSYNC)
1 : Disable
0 : Enable
```

DFT_GPIO1: LOAD_EEPROM_STRAPS

```
Selects Loading of STRAPS from EPROM
1 : Bypass the loading of EEPROM straps and use Hardware Default Values
0 : I2C Master can load strap values from EEPROM if connected, or use
default values if not connected
```

Enable Side Port Memory

```
RS880: HSYNC#
0:   Enable        Register Readback of strap:
1 :  Disable       NB_CLKCFG:CLK_TOP_SPARE_D[1]
```

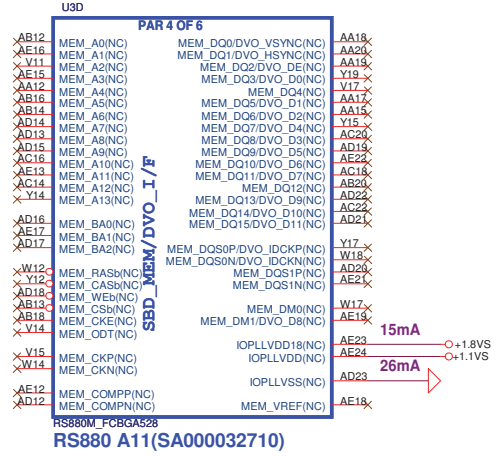

Security Classification	Compal Secret Data			Compal Electronics, Inc.
Issued Date	2008/10/06	Deciphered Date	2010/04/30	Title: RS880 PWR/GND
				Size: A3 Custom; Document Number: NAWE5 LA-5753P; Rev: 1.A
				Date: Tuesday, May 18, 2010; Sheet 12 of 48

THIS SHEET OF ENGINEERING DRAWING IS THE PROPRIETARY PROPERTY OF COMPAL ELECTRONICS, INC. AND CONTAINS CONFIDENTIAL AND TRADE SECRET INFORMATION. THIS SHEET MAY NOT BE TRANSFERRED FROM THE CUSTODY OF THE COMPETENT DIVISION OF R&D DEPARTMENT EXCEPT AS AUTHORIZED BY COMPAL ELECTRONICS, INC. NEITHER THIS SHEET NOR THE INFORMATION IT CONTAINS MAY BE USED BY OR DISCLOSED TO ANY THIRD PARTY WITHOUT PRIOR WRITTEN CONSENT OF COMPAL ELECTRONICS, INC.

WWW.AliSaler.Com

PCIE LANE REVERSAL

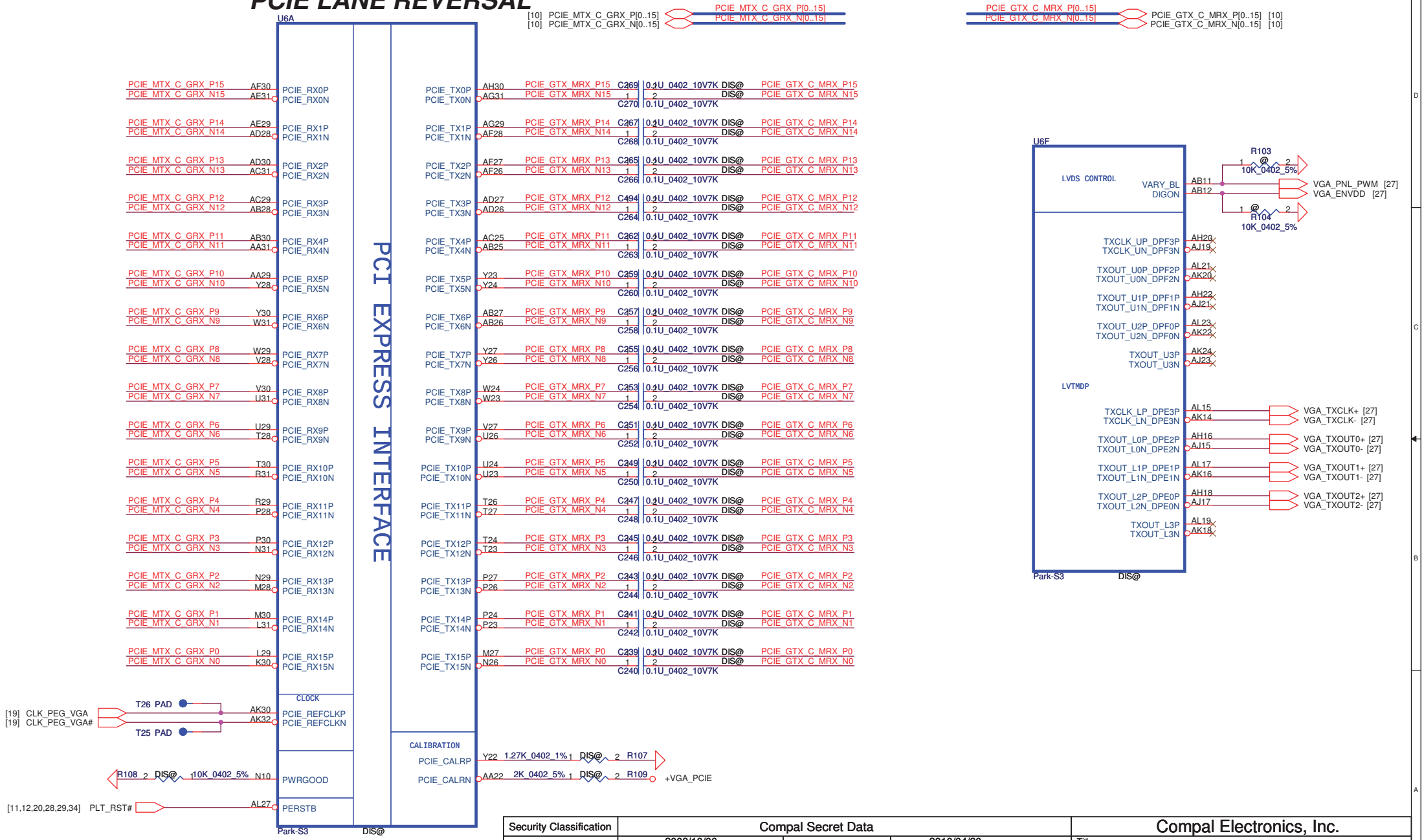

Security Classification	Compal Secret Data		
Issued Date	2008/10/06	Deciphered Date	2010/04/30

THIS SHEET OF ENGINEERING DRAWING IS THE PROPRIETARY PROPERTY OF COMPAL ELECTRONICS, INC. AND CONTAINS CONFIDENTIAL AND TRADE SECRET INFORMATION. THIS SHEET MAY NOT BE TRANSFERED FROM THE CUSTODY OF THE COMPETENT DIVISION OF R&D DEPARTMENT EXCEPT AS AUTHORIZED BY COMPAL ELECTRONICS, INC. NEITHER THIS SHEET NOR THE INFORMATION IT CONTAINS MAY BE USED BY OR DISCLOSED TO ANY THIRD PARTY WITHOUT PRIOR WRITTEN CONSENT OF COMPAL ELECTRONICS, INC.

Compal Electronics, Inc.

Title: PARK-S3 PCIE/LVDS

Size: Custom | Document Number: NAWE5 LA-5753P | Rev: 1.A

Date: Tuesday, May 18, 2010 | Sheet 13 of 48

WWW.AliSaler.Com

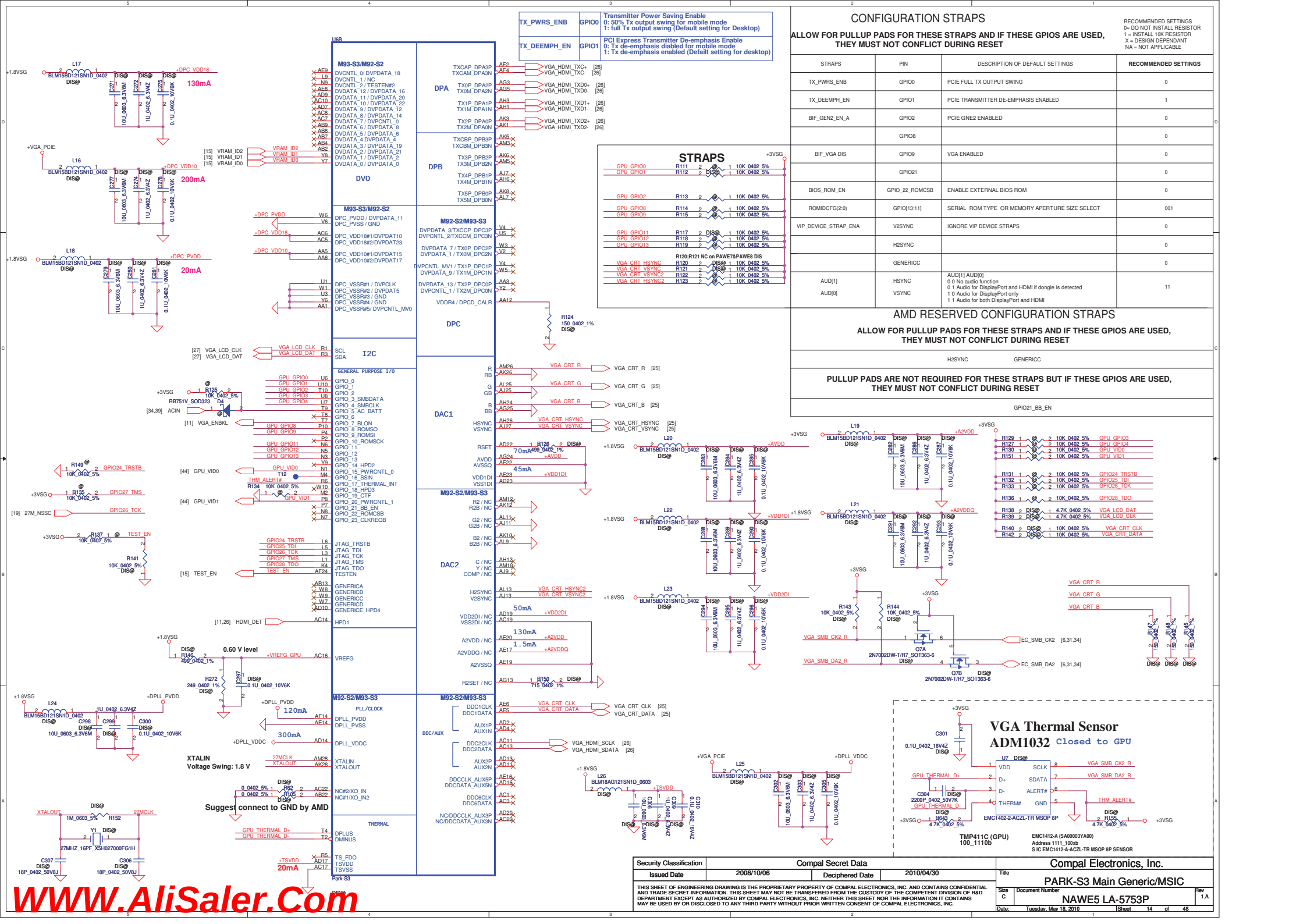

CONFIGURATION STRAPS

ALLOW FOR PULLUP PADS FOR THESE STRAPS AND IF THESE GPIOS ARE USED, THEY MUST NOT CONFLICT DURING RESET

RECOMMENDED SETTINGS
0= DO NOT INSTALL RESISTOR
1 = INSTALL 10K RESISTOR
X = DESIGN DEPENDANT
NA = NOT APPLICABLE

STRAPS	PIN	DESCRIPTION OF DEFAULT SETTINGS	RECOMMENDED SETTINGS
TX_PWRS_ENB	GPIO0	PCIE FULL TX OUTPUT SWING	0
TX_DEEMPH_EN	GPIO1	PCIE TRANSMITTER DE-EMPHASIS ENABLED	1
BIF_GEN2_EN_A	GPIO2	PCIE GNE2 ENABLED	0
	GPIO8		0
BIF_VGA DIS	GPIO9	VGA ENABLED	0
	GPIO21		0
BIOS_ROM_EN	GPIO_22_ROMCSB	ENABLE EXTERNAL BIOS ROM	0
ROMIDCFG(2:0)	GPIO[13:11]	SERIAL ROM TYPE OR MEMORY APERTURE SIZE SELECT	001
VIP_DEVICE_STRAP_ENA	V2SYNC	IGNORE VIP DEVICE STRAPS	0
	H2SYNC		0
	GENERICC		0
AUD[1] AUD[0]	HSYNC VSYNC	AUD[1] AUD[0] 0 0 No audio function 0 1 Audio for DisplayPort and HDMI if dongle is detected 1 0 Audio for DisplayPort only 1 1 Audio for both DisplayPort and HDMI	11

AMD RESERVED CONFIGURATION STRAPS

ALLOW FOR PULLUP PADS FOR THESE STRAPS AND IF THESE GPIOS ARE USED, THEY MUST NOT CONFLICT DURING RESET

H2SYNC	GENERICC

PULLUP PADS ARE NOT REQUIRED FOR THESE STRAPS BUT IF THESE GPIOS ARE USED, THEY MUST NOT CONFLICT DURING RESET

GPIO21_BB_EN

WWW.AliSaler.Com

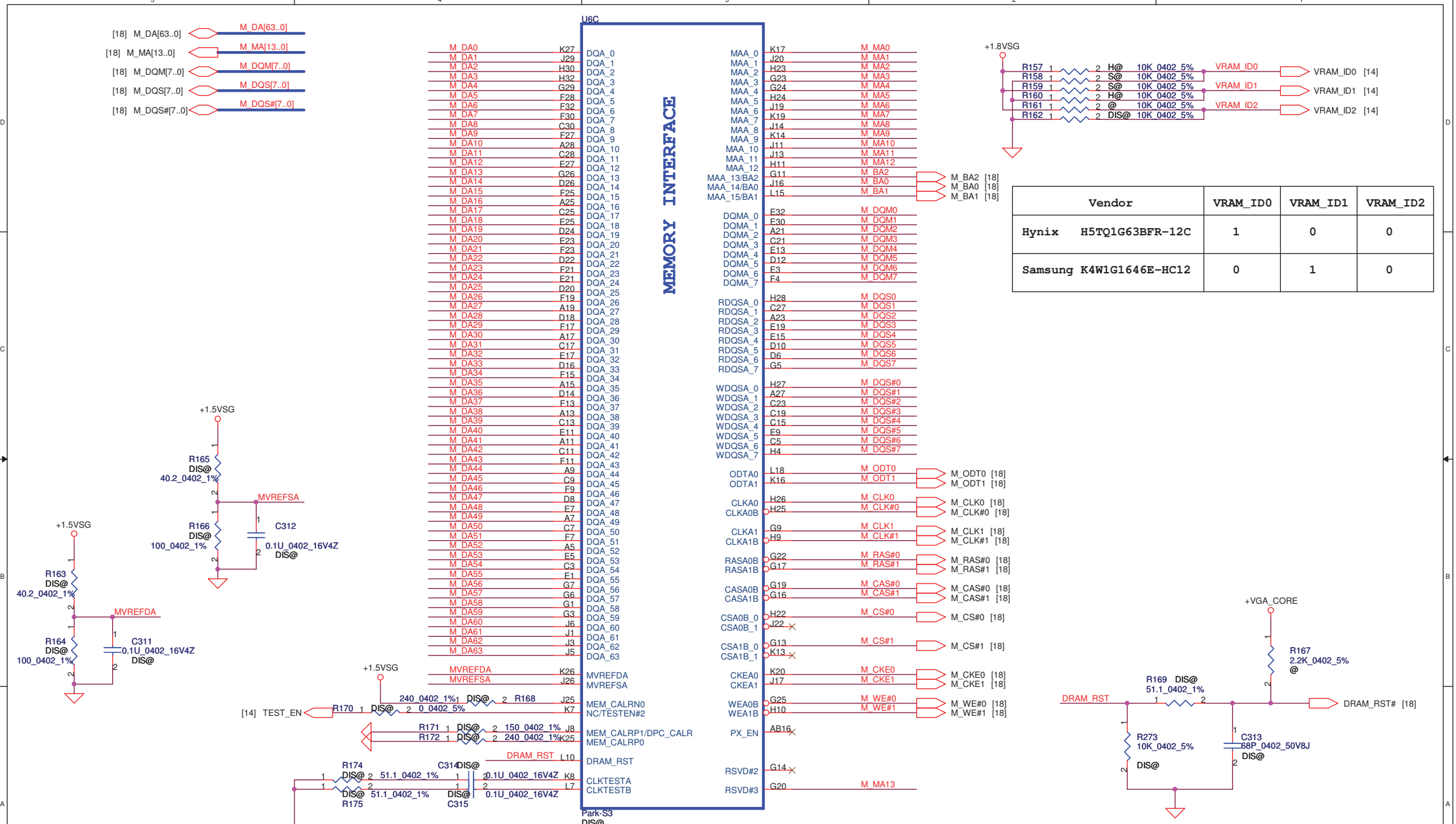

Vendor	VRAM_ID0	VRAM_ID1	VRAM_ID2
Hynix H5TQ1G63BFR-12C	1	0	0
Samsung K4W1G1646E-HC12	0	1	0

Security Classification	Compal Secret Data		
Issued Date	2008/10/06	Deciphered Date	2010/04/30

THIS SHEET OF ENGINEERING DRAWING IS THE PROPRIETARY PROPERTY OF COMPAL ELECTRONICS, INC. AND CONTAINS CONFIDENTIAL AND TRADE SECRET INFORMATION. THIS SHEET MAY NOT BE TRANSFERED FROM THE CUSTODY OF THE COMPETENT DIVISION OF R&D DEPARTMENT EXCEPT AS AUTHORIZED BY COMPAL ELECTRONICS, INC. NEITHER THIS SHEET NOR THE INFORMATION IT CONTAINS MAY BE USED BY OR DISCLOSED TO ANY THIRD PARTY WITHOUT PRIOR WRITTEN CONSENT OF COMPAL ELECTRONICS, INC.

Compal Electronics, Inc.

Title: PARK-S3 MEM Interface

Size: B | Document Number: NAWE5 LA-5753P | Rev: 1.A

Date: Tuesday, May 18, 2010 | Sheet 15 of 48

WWW.AliSaler.Com

DPE_VDD10 DPF_VDD10	Park-S3: TMDS/DP=110mA@1.0V : LVDS=120mA@1.0V

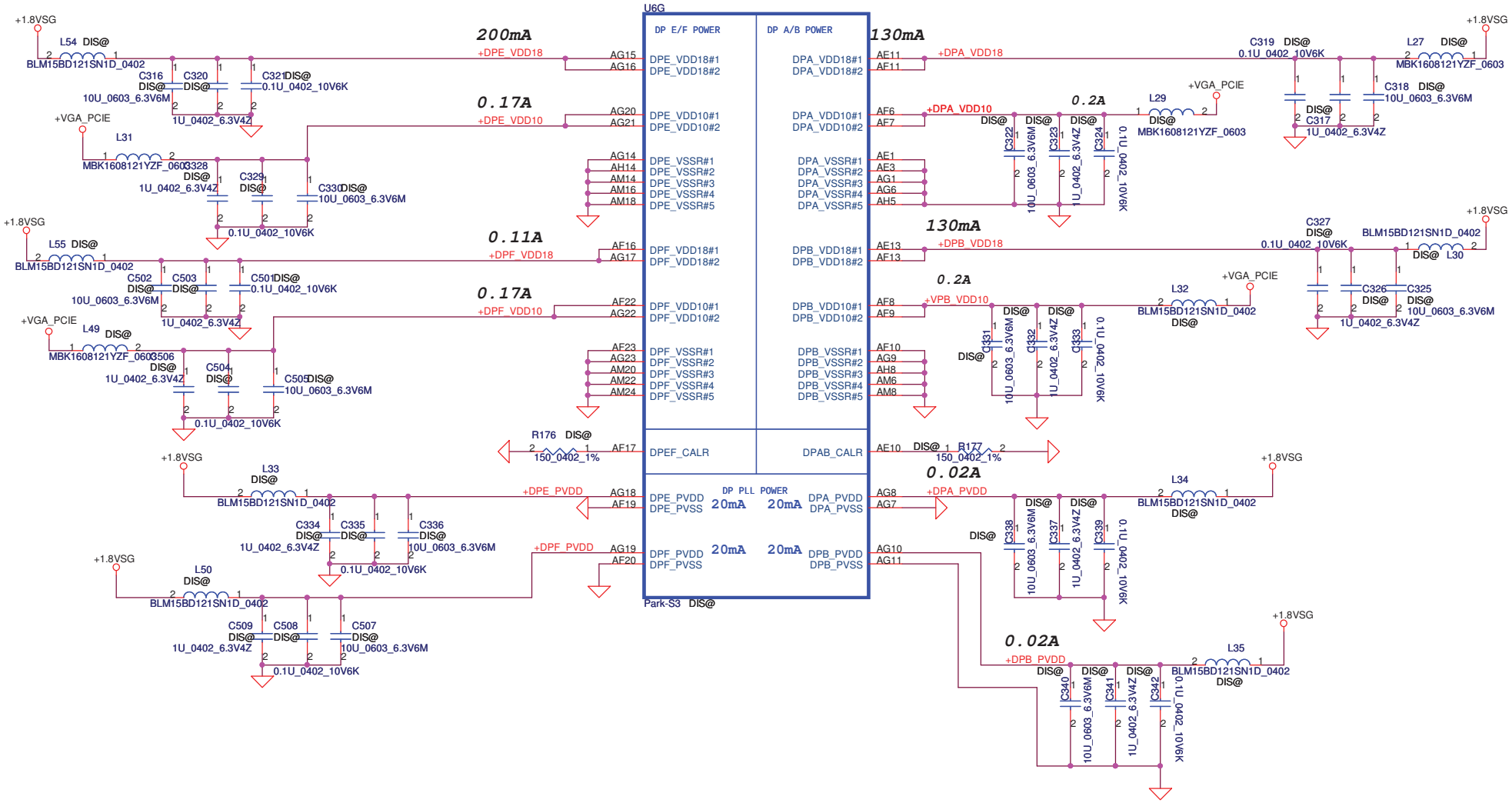

Security Classification	Compal Secret Data		
Issued Date	2008/10/06	Deciphered Date	2010/04/30

THIS SHEET OF ENGINEERING DRAWING IS THE PROPRIETARY PROPERTY OF COMPAL ELECTRONICS, INC. AND CONTAINS CONFIDENTIAL AND TRADE SECRET INFORMATION. THIS SHEET MAY NOT BE TRANSFERED FROM THE CUSTODY OF THE COMPETENT DIVISION OF R&D DEPARTMENT EXCEPT AS AUTHORIZED BY COMPAL ELECTRONICS, INC. NEITHER THIS SHEET NOR THE INFORMATION IT CONTAINS MAY BE USED BY OR DISCLOSED TO ANY THIRD PARTY WITHOUT PRIOR WRITTEN CONSENT OF COMPAL ELECTRONICS, INC.

Compal Electronics, Inc.

Title: PARK-S3 DPX Power

Size: B | Document Number: NAWE5 LA-5753P | Rev: 1.A

Date: Tuesday, May 18, 2010 | Sheet 16 of 48

WWW.AliSaler.Com

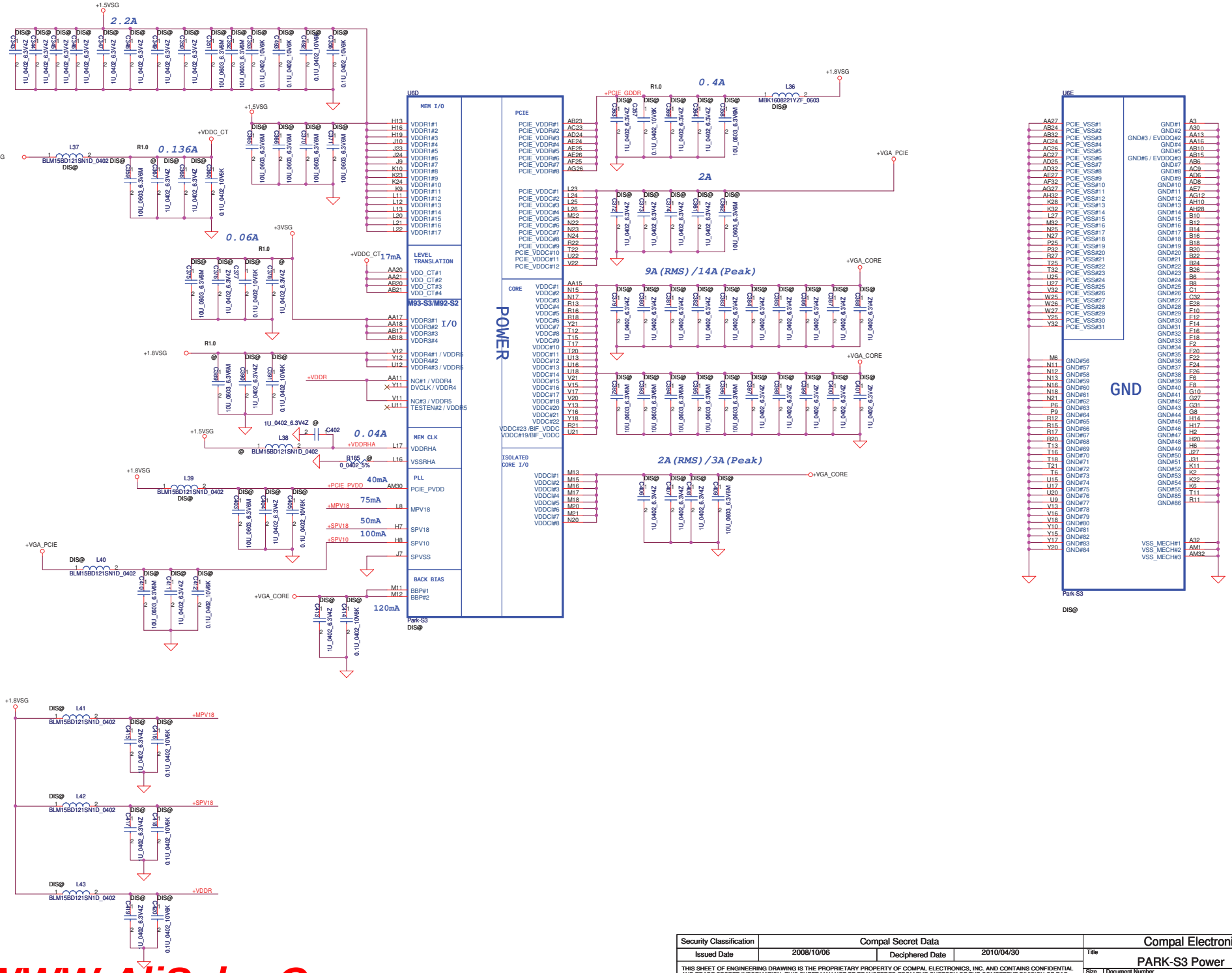

Security Classification	Compal Secret Data		
Issued Date	2008/10/06	Deciphered Date	2010/04/30

THIS SHEET OF ENGINEERING DRAWING IS THE PROPRIETARY PROPERTY OF COMPAL ELECTRONICS, INC. AND CONTAINS CONFIDENTIAL AND TRADE SECRET INFORMATION. THIS SHEET MAY NOT BE TRANSFERED FROM THE CUSTODY OF THE COMPETENT DIVISION OF R&D DEPARTMENT EXCEPT AS AUTHORIZED BY COMPAL ELECTRONICS, INC. NEITHER THIS SHEET NOR THE INFORMATION IT CONTAINS MAY BE USED BY OR DISCLOSED TO ANY THIRD PARTY WITHOUT PRIOR WRITTEN CONSENT OF COMPAL ELECTRONICS, INC.

Compal Electronics, Inc.

Title: PARK-S3 Power

Size: C | Document Number: NAWE5 LA-5753P | Rev: 1.A

Date: Tuesday, May 18, 2010 | Sheet 17 of 48

WWW.AliSaler.Com

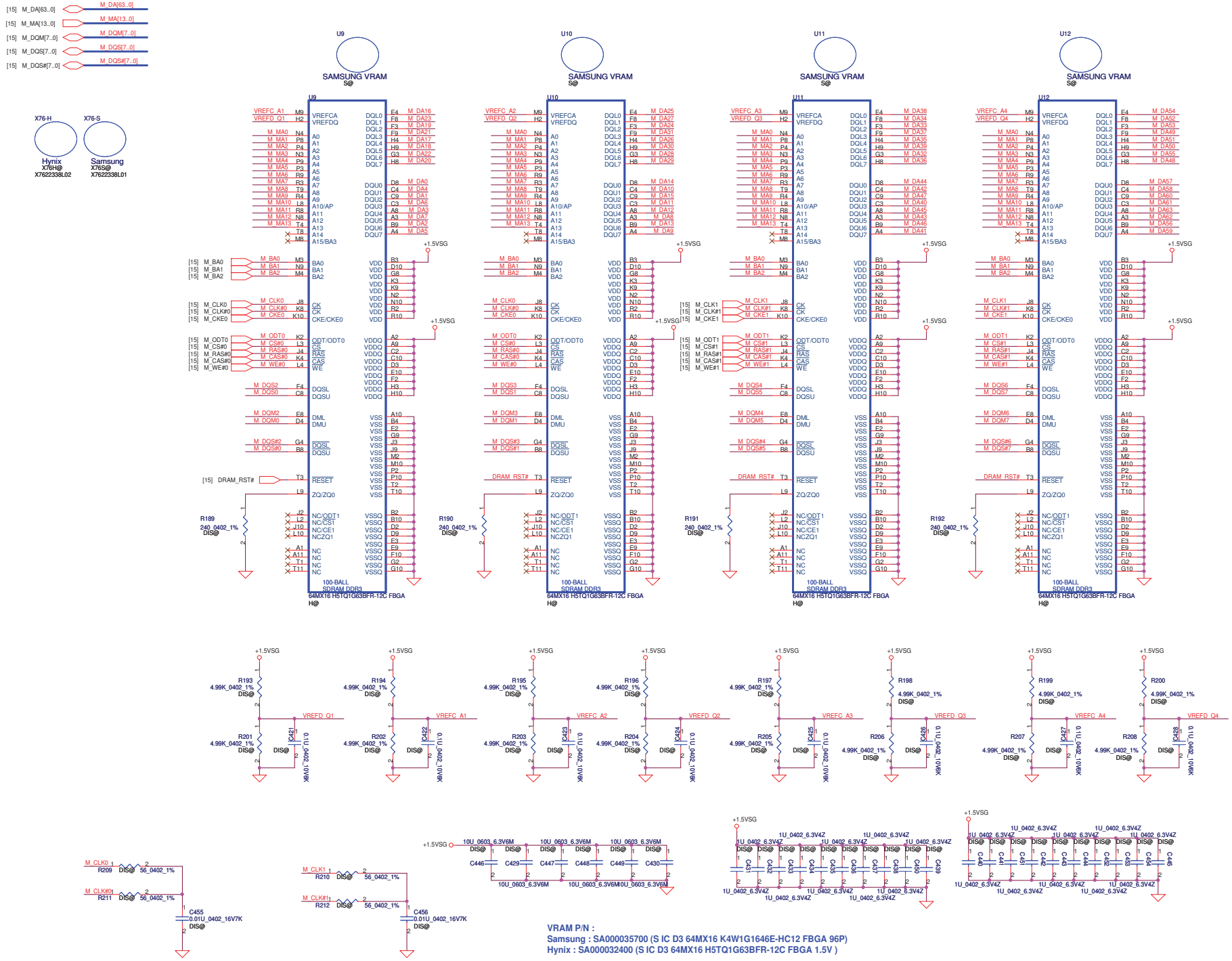

VRAM P/N :
Samsung : SA000035700 (S IC D3 64MX16 K4W1G1646E-HC12 FBGA 96P)
Hynix : SA000032400 (S IC D3 64MX16 H5TQ1G63BFR-12C FBGA 1.5V)

Security Classification	Compal Secret Data			Compal Electronics, Inc.
Issued Date	2008/10/06	Deciphered Date	2010/04/30	Title: PARK-S3 DDR3 VRAM
				Size: C; Document Number: NAWE5 LA-5753P; Rev: 1.A
				Date: Tuesday, May 18, 2010; Sheet 18 of 48

THIS SHEET OF ENGINEERING DRAWING IS THE PROPRIETARY PROPERTY OF COMPAL ELECTRONICS, INC. AND CONTAINS CONFIDENTIAL AND TRADE SECRET INFORMATION. THIS SHEET MAY NOT BE TRANSFERED FROM THE CUSTODY OF THE COMPETENT DIVISION OF R&D DEPARTMENT EXCEPT AS AUTHORIZED BY COMPAL ELECTRONICS, INC. NEITHER THIS SHEET NOR THE INFORMATION IT CONTAINS MAY BE USED BY OR DISCLOSED TO ANY THIRD PARTY WITHOUT PRIOR WRITTEN CONSENT OF COMPAL ELECTRONICS, INC.

WWW.AliSaler.Com

Check Timing +1.1VS <50us +3VS for EXT CLKGEN satable

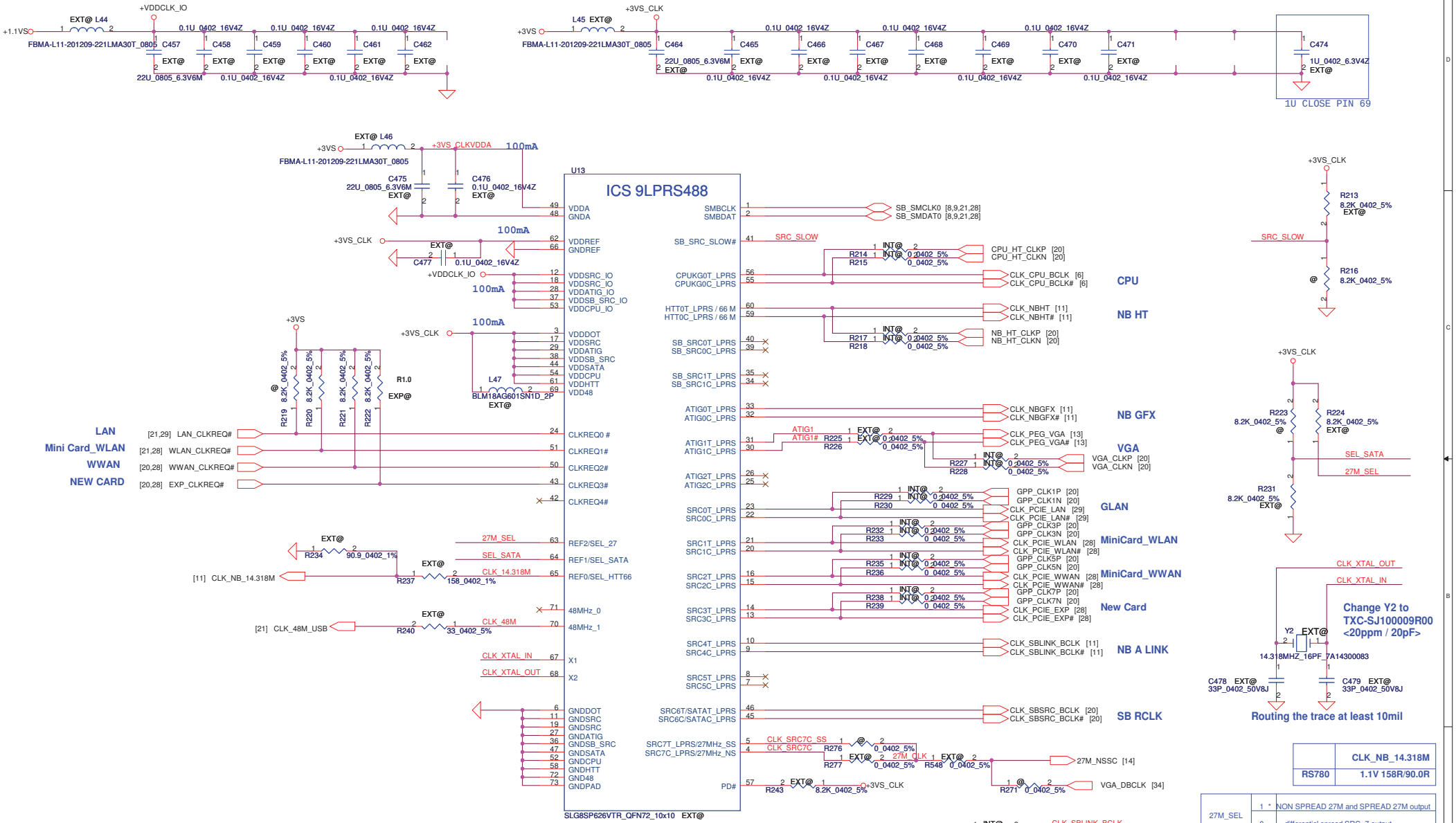

1st (SILEGO) : SA00001Z310 S IC SLG8SP626VTR QFN 72P CLK GEN

2nd (ICS) : SA000023H10 S IC ICS9LPRS488CKLFT MLF 72P CLK GEN

Security Classification	Compal Secret Data		
Issued Date	2008/10/06	Deciphered Date	2010/04/30

THIS SHEET OF ENGINEERING DRAWING IS THE PROPRIETARY PROPERTY OF COMPAL ELECTRONICS, INC. AND CONTAINS CONFIDENTIAL AND TRADE SECRET INFORMATION. THIS SHEET MAY NOT BE TRANSFERRED FROM THE CUSTODY OF THE COMPETENT DIVISION OF R&D DEPARTMENT EXCEPT AS AUTHORIZED BY COMPAL ELECTRONICS, INC. NEITHER THIS SHEET NOR THE INFORMATION IT CONTAINS MAY BE USED BY OR DISCLOSED TO ANY THIRD PARTY WITHOUT PRIOR WRITTEN CONSENT OF COMPAL ELECTRONICS, INC.

Compal Electronics, Inc.

Title: Clock generator

Size: B/26 Custom | Document Number: NAWE5 LA-5753P | Rev: 1.A

Date: Tuesday, May 18, 2010 | Sheet 19 of 48

WWW.AliSaler.Com

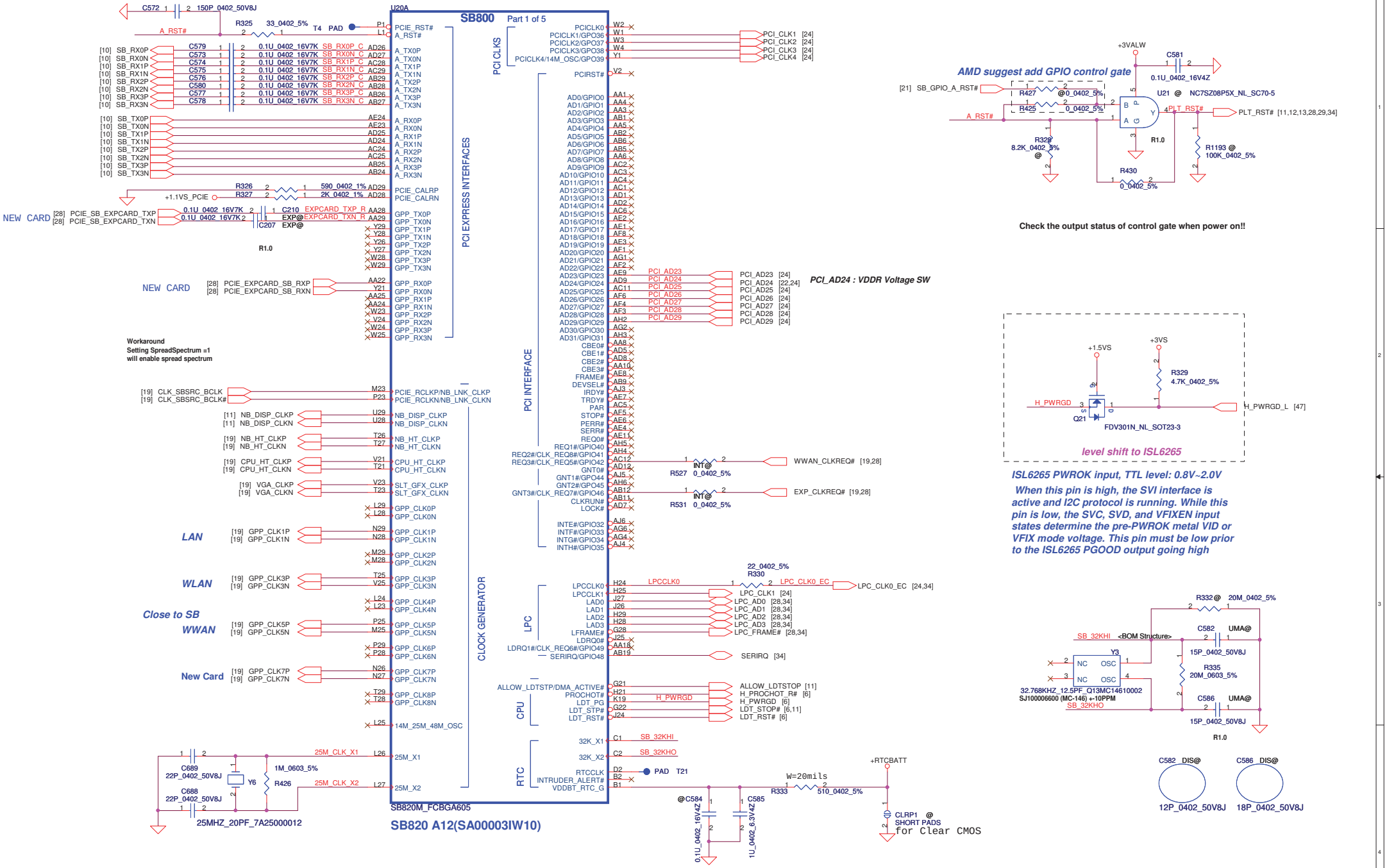

Security Classification	Compal Secret Data			Compal Electronics, Inc.
Issued Date	2008/10/06	Deciphered Date	2010/04/30	Title: SB820-PCIE/PCI/ACPI/LPC/RTC
				Size: Custom; Document Number: NAWE5 LA-5753P; Rev: 1.A
				Date: Tuesday, May 18, 2010; Sheet 20 of 48

THIS SHEET OF ENGINEERING DRAWING IS THE PROPRIETARY PROPERTY OF COMPAL ELECTRONICS, INC. AND CONTAINS CONFIDENTIAL AND TRADE SECRET INFORMATION. THIS SHEET MAY NOT BE TRANSFERED FROM THE CUSTODY OF THE COMPETENT DIVISION OF R&D DEPARTMENT EXCEPT AS AUTHORIZED BY COMPAL ELECTRONICS, INC. NEITHER THIS SHEET NOR THE INFORMATION IT CONTAINS MAY BE USED BY OR DISCLOSED TO ANY THIRD PARTY WITHOUT PRIOR WRITTEN CONSENT OF COMPAL ELECTRONICS, INC.

WWW.AliSaler.Com

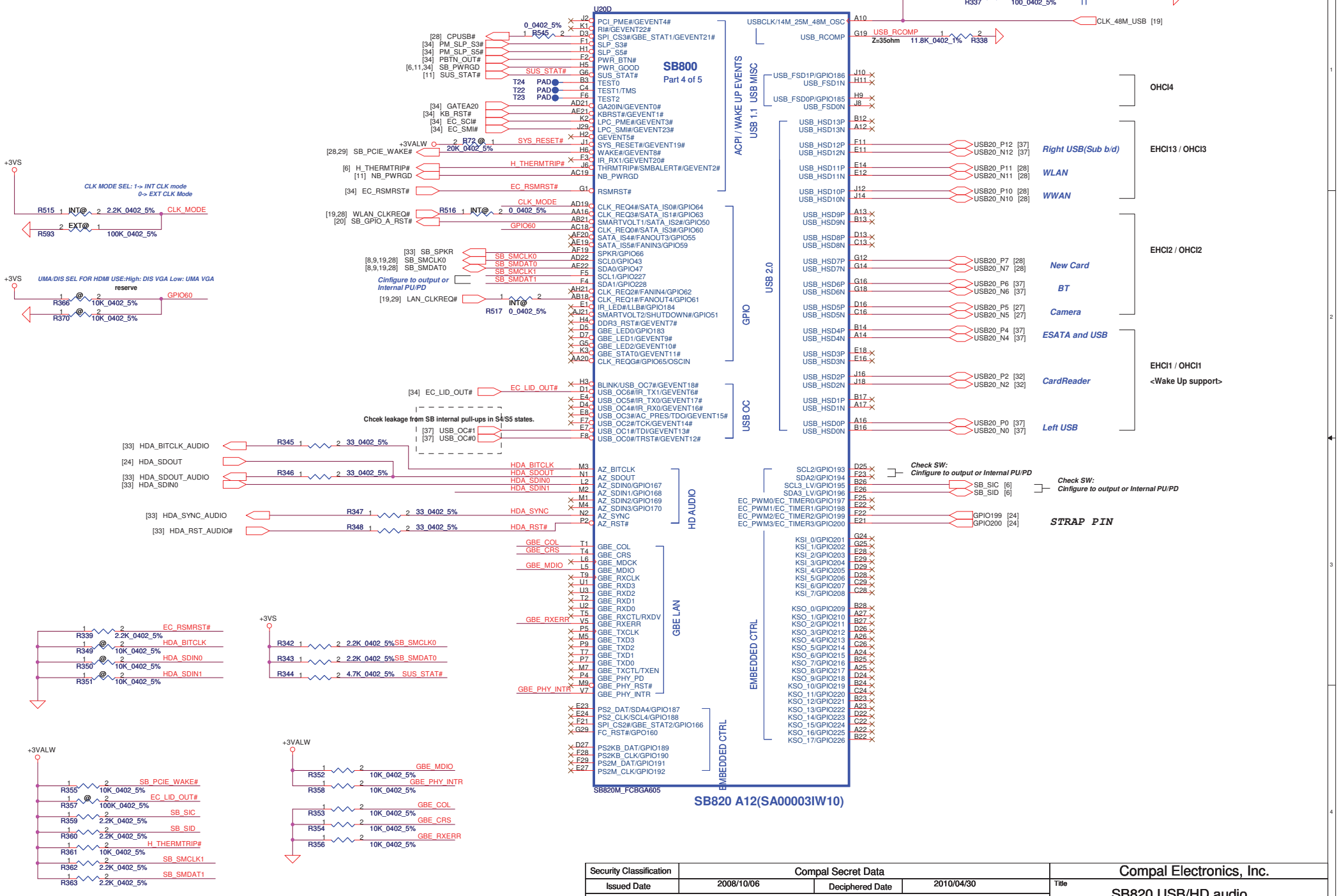

Security Classification	Compal Secret Data		
Issued Date	2008/10/06	Deciphered Date	2010/04/30

THIS SHEET OF ENGINEERING DRAWING IS THE PROPRIETARY PROPERTY OF COMPAL ELECTRONICS, INC. AND CONTAINS CONFIDENTIAL AND TRADE SECRET INFORMATION. THIS SHEET MAY NOT BE TRANSFERRED FROM THE CUSTODY OF THE COMPETENT DIVISION OF R&D DEPARTMENT EXCEPT AS AUTHORIZED BY COMPAL ELECTRONICS, INC. NEITHER THIS SHEET NOR THE INFORMATION IT CONTAINS MAY BE USED BY OR DISCLOSED TO ANY THIRD PARTY WITHOUT PRIOR WRITTEN CONSENT OF COMPAL ELECTRONICS, INC.

Compal Electronics, Inc.

Title: SB820 USB/HD audio

Size: Custom | Document Number: NAWE5 LA-5753P | Rev: 1.A

Date: Tuesday, May 18, 2010 | Sheet 21 of 48

WWW.AliSaler.Com

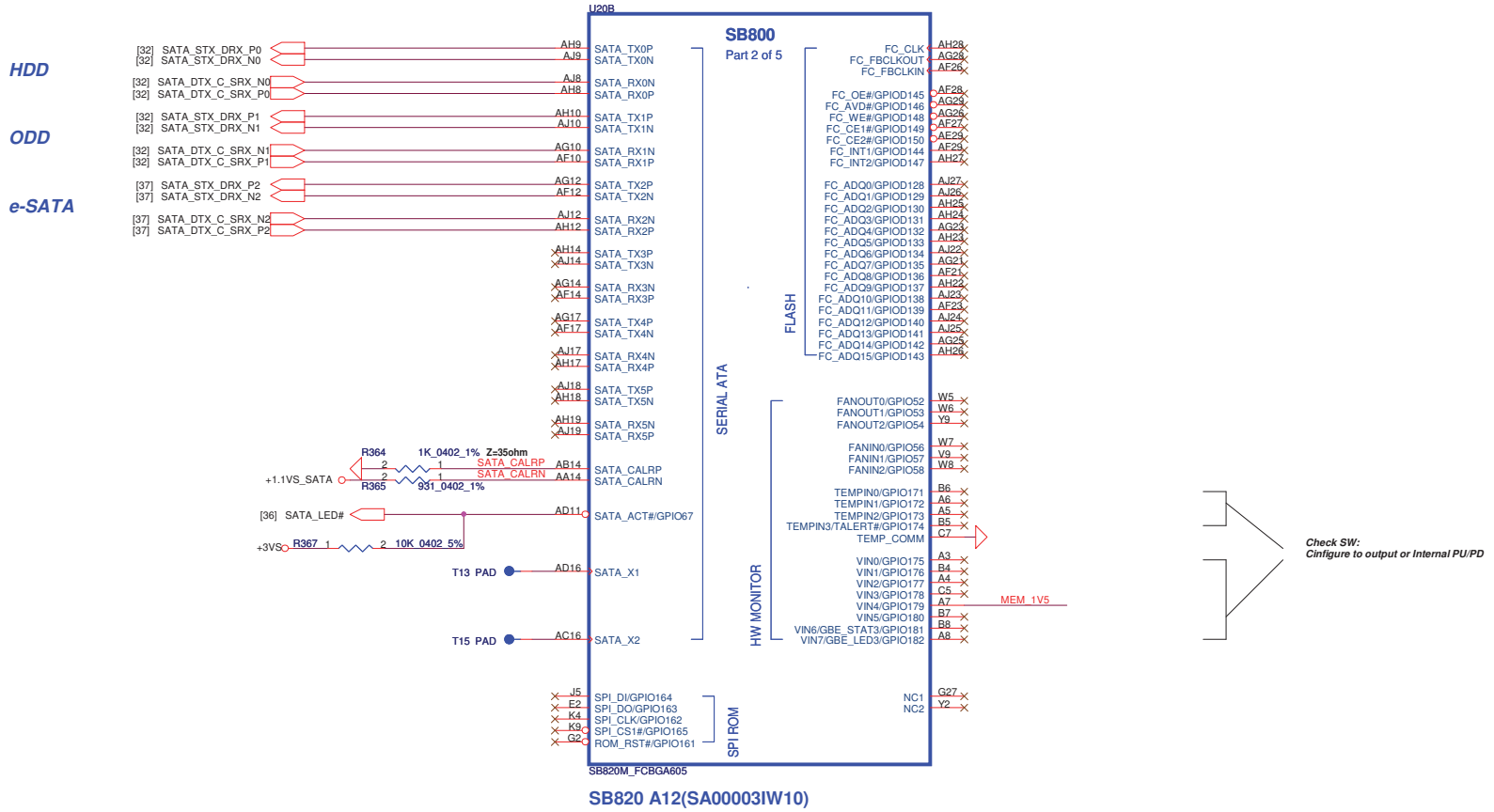

SB820 A12(SA00003IW10)

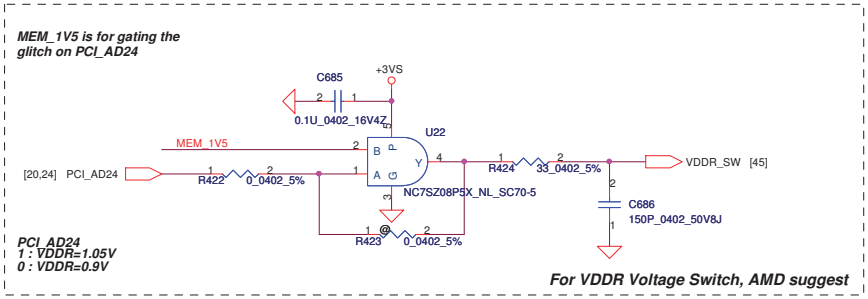

Security Classification	Compal Secret Data		Compal Electronics, Inc.
Issued Date	2008/10/06	Deciphered Date 2010/04/30	Title SB820 SATA/IDE/SPI
THIS SHEET OF ENGINEERING DRAWING IS THE PROPRIETARY PROPERTY OF COMPAL ELECTRONICS, INC. AND CONTAINS CONFIDENTIAL AND TRADE SECRET INFORMATION. THIS SHEET MAY NOT BE TRANSFERED FROM THE CUSTODY OF THE COMPETENT DIVISION OF R&D DEPARTMENT EXCEPT AS AUTHORIZED BY COMPAL ELECTRONICS, INC. NEITHER THIS SHEET NOR THE INFORMATION IT CONTAINS MAY BE USED BY OR DISCLOSED TO ANY THIRD PARTY WITHOUT PRIOR WRITTEN CONSENT OF COMPAL ELECTRONICS, INC.			Size Custom / Document Number NAWE5 LA-5753P / Rev 1.A
			Date: Tuesday, May 18, 2010 / Sheet 22 of 48

WWW.AliSaler.Com

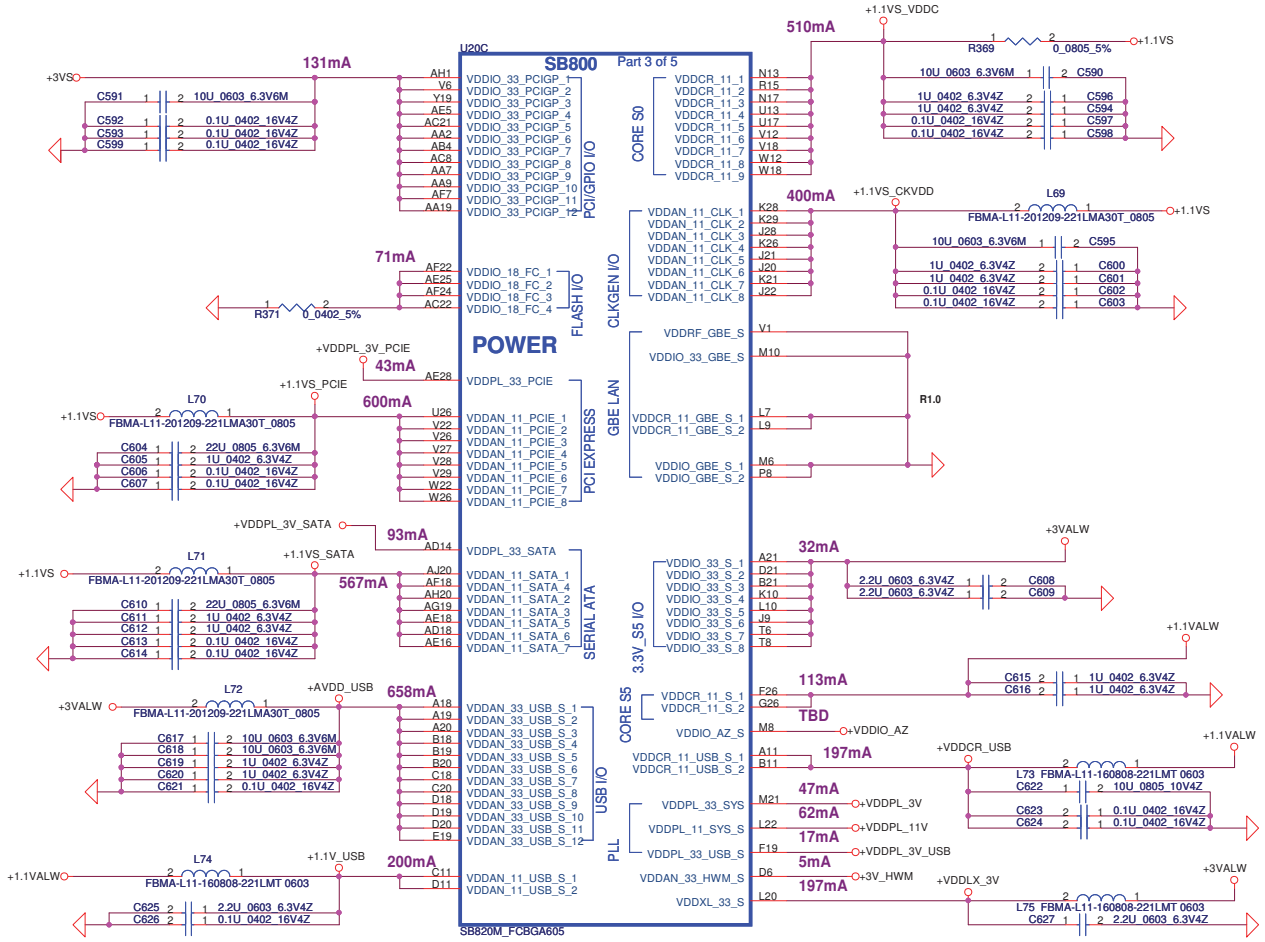

SB820 A12(SA00003IW10)

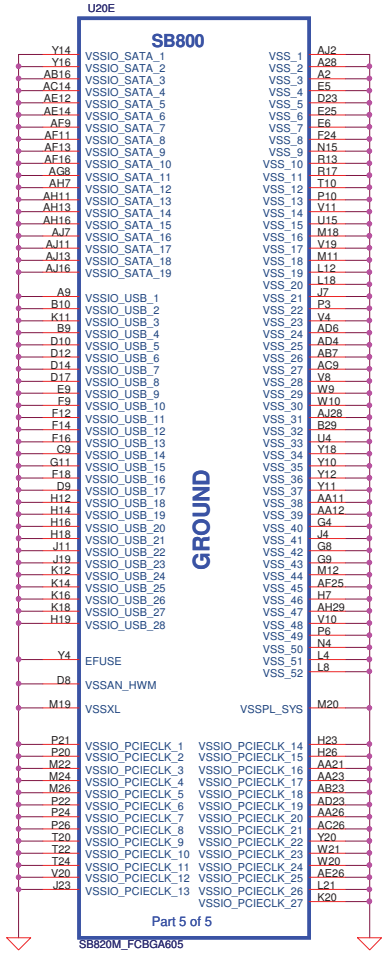

SB820 A12(SA00003IW10)

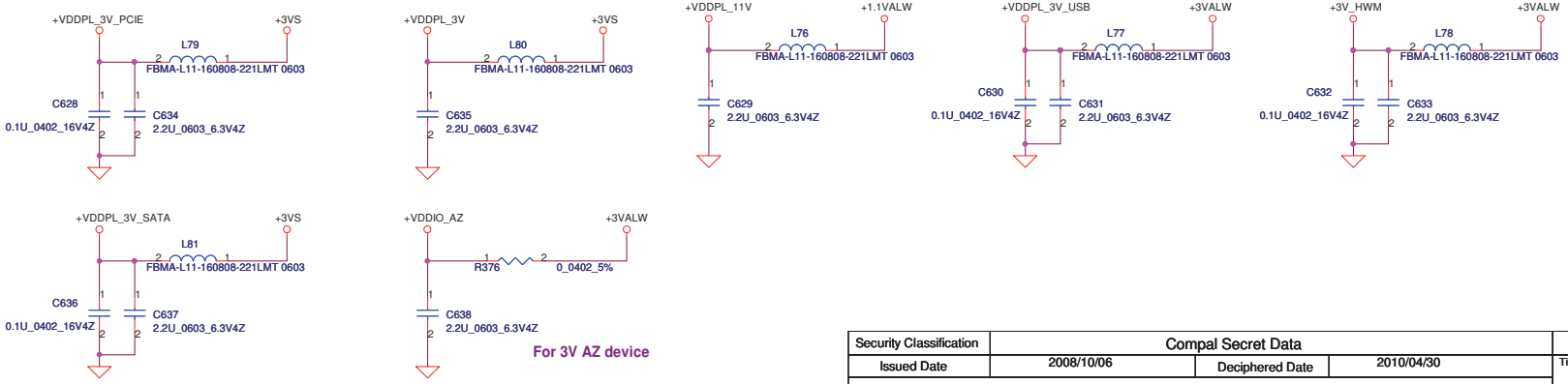

For 3V AZ device

Security Classification	Compal Secret Data		
Issued Date	2008/10/06	Deciphered Date	2010/04/30

THIS SHEET OF ENGINEERING DRAWING IS THE PROPRIETARY PROPERTY OF COMPAL ELECTRONICS, INC. AND CONTAINS CONFIDENTIAL AND TRADE SECRET INFORMATION. THIS SHEET MAY NOT BE TRANSFERED FROM THE CUSTODY OF THE COMPETENT DIVISION OF R&D DEPARTMENT EXCEPT AS AUTHORIZED BY COMPAL ELECTRONICS, INC. NEITHER THIS SHEET NOR THE INFORMATION IT CONTAINS MAY BE USED BY OR DISCLOSED TO ANY THIRD PARTY WITHOUT PRIOR WRITTEN CONSENT OF COMPAL ELECTRONICS, INC.

Compal Electronics, Inc.

Title: SB820 power/GND

Size: B/28 Custom | Document Number: NAWE5 LA-5753P | Rev: 1.A

Date: Tuesday, May 18, 2010 | Sheet 23 of 48

WWW.AliSaler.Com

REQUIRED STRAPS

Check Internal PU/PD

	AZ_SDOUT	PCI_CLK1	PCI_CLK2	PCI_CLK3	PCI_CLK4	LPC_CLK0	LCP_CLK1	GPIO200 GPIO199
PULL HIGH	LOW POWER MODE	ALLOW PCIE GEN2	WATCHDOG TIMER ENABLE	USE DEBUG STRAP	CPU/HT CLK SEL Enable	EC ENABLE	CLOCKGEN ENABLE	H,H = Reserved H,L = SPI ROM L,H = LPC ROM (Default L,NC) L,L = FWH ROM
PULL LOW	Performance MODE DEFAULT	FORCE PCIE GEN1 DEFAULT	WATCHDOG TIMER DISABLE DEFAULT	IGNORE DEBUG STRAP DEFAULT	CPU/HT CLK SEL Disable DEFAULT	EC DISABLE DEFAULT	CLOCKGEN DISABLE DEFAULT	

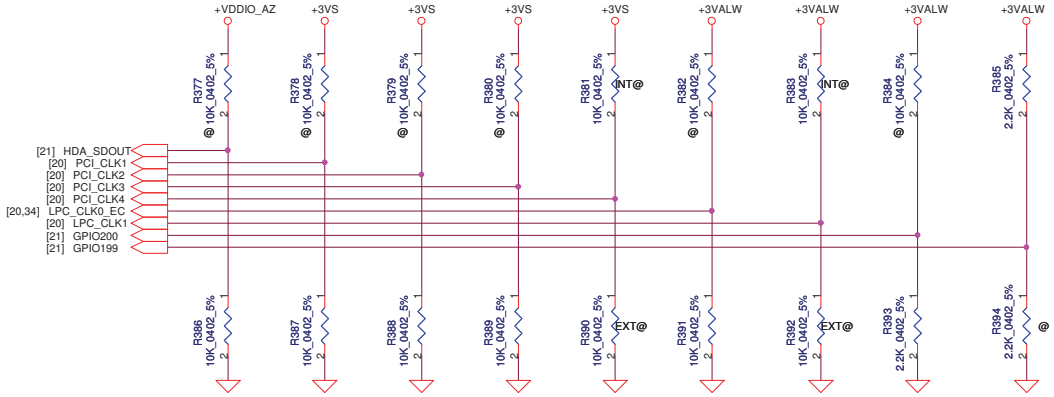

DEBUG STRAPS

SB800 HAS 15K INTERNAL PU FOR PCI_AD[27:23]

		PCI_AD27	PCI_AD26	PCI_AD25	PCI_AD24	PCI_AD23
PULL HIGH		USE PCI PLL DEFAULT	DISABLE ILA AUTORUN DEFAULT	USE FC PLL DEFAULT	USE DEFAULT PCIE STRAPS DEFAULT	DISABLE PCI MEM BOOT DEFAULT
PULL LOW		BYPASS PCI PLL	ENABLE ILA AUTORUN	BYPASS FC PLL	USE EEPROM PCIE STRAPS	ENABLE PCI MEM BOOT

Check AD29,AD28 strap function

check default

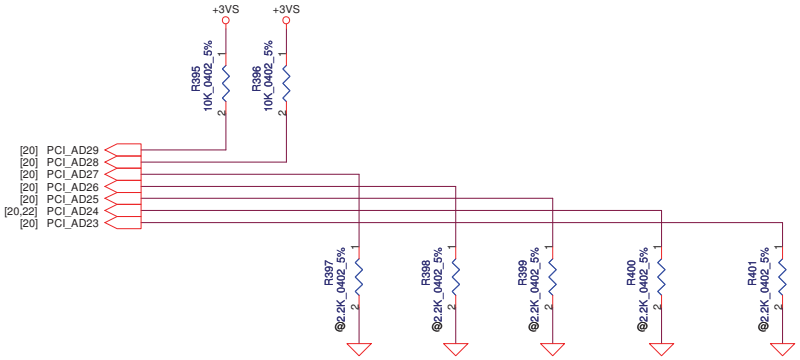

Security Classification	Compal Secret Data		Compal Electronics, Inc.
Issued Date	2008/10/06	Deciphered Date 2010/04/30	Title SB820 STRAPS
THIS SHEET OF ENGINEERING DRAWING IS THE PROPRIETARY PROPERTY OF COMPAL ELECTRONICS, INC. AND CONTAINS CONFIDENTIAL AND TRADE SECRET INFORMATION. THIS SHEET MAY NOT BE TRANSFERED FROM THE CUSTODY OF THE COMPETENT DIVISION OF R&D DEPARTMENT EXCEPT AS AUTHORIZED BY COMPAL ELECTRONICS, INC. NEITHER THIS SHEET NOR THE INFORMATION IT CONTAINS MAY BE USED BY OR DISCLOSED TO ANY THIRD PARTY WITHOUT PRIOR WRITTEN CONSENT OF COMPAL ELECTRONICS, INC.			Size Custom Document Number NAWE5 LA-5753P Rev 1.A
			Date: Tuesday, May 18, 2010 Sheet 24 of 48

WWW.AliSaler.Com

CRT Connector

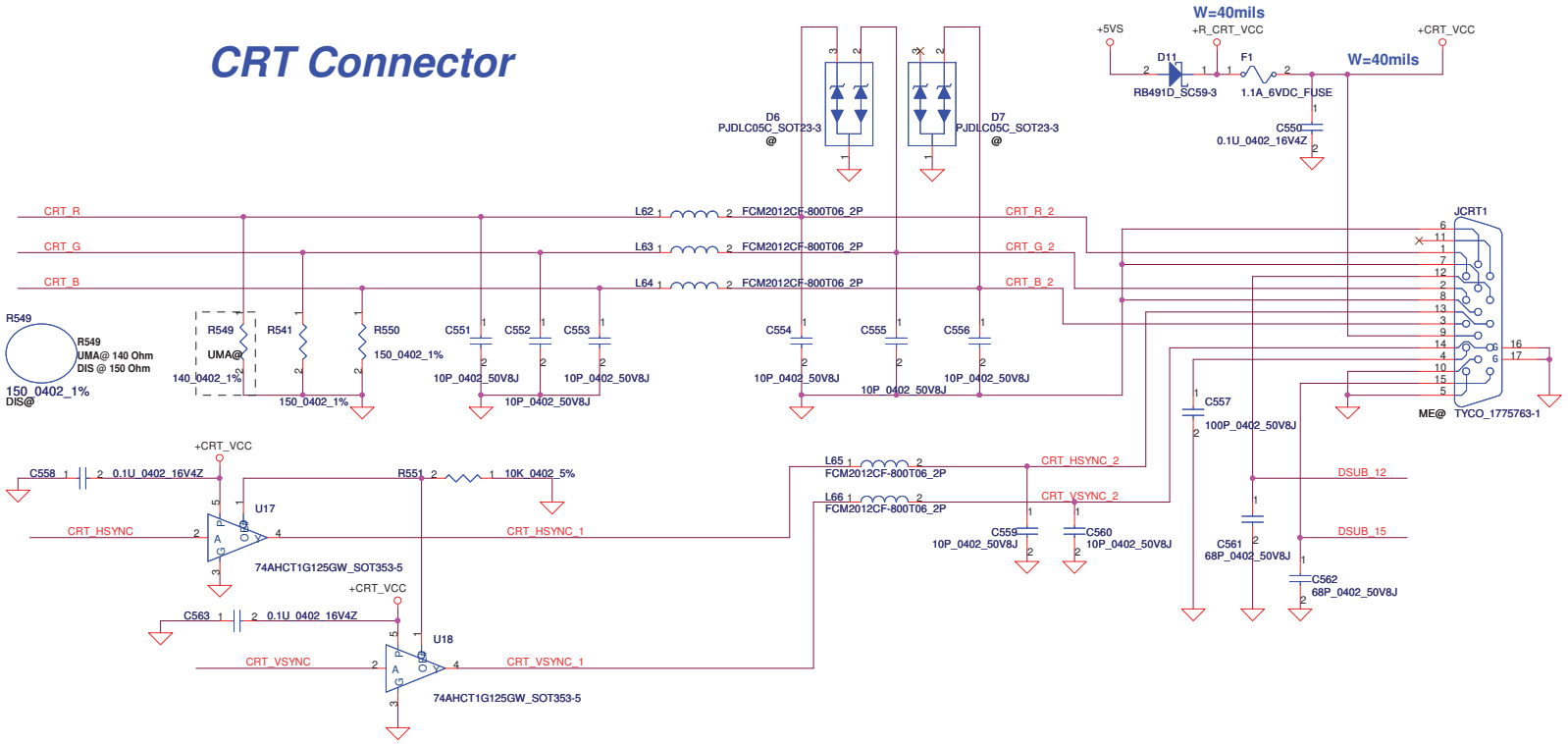

For UMA Only

[11] GMCH_CRT_R	GMCH_CRT_R	R677	2	UMA@	1	0_0402_5%	CRT_R
[11] GMCH_CRT_G	GMCH_CRT_G	R542	2	UMA@	1	0_0402_5%	CRT_G
[11] GMCH_CRT_B	GMCH_CRT_B	R679	2	UMA@	1	0_0402_5%	CRT_B
[11,12] GMCH_CRT_HSYNC	GMCH_CRT_HSYNC	R547	2	UMA@	1	0_0402_5%	CRT_HSYNC
[11,12] GMCH_CRT_VSYNC	GMCH_CRT_VSYNC	R543	2	UMA@	1	0_0402_5%	CRT_VSYNC
[11] GMCH_CRT_DATA	GMCH_CRT_DATA	R546	2	UMA@	1	0_0402_5%	CRT_DATA
[11] GMCH_CRT_CLK	GMCH_CRT_CLK	R678	2	UMA@	1	0_0402_5%	CRT_CLK

For VGA Only

[14] VGA_CRT_R	VGA_CRT_R	R539	2	DIS@	1	0_0402_5%	CRT_R
[14] VGA_CRT_G	VGA_CRT_G	R552	2	DIS@	1	0_0402_5%	CRT_G
[14] VGA_CRT_B	VGA_CRT_B	R554	2	DIS@	1	0_0402_5%	CRT_B
[14] VGA_CRT_HSYNC	VGA_CRT_HSYNC	R535	2	DIS@	1	0_0402_5%	CRT_HSYNC
[14] VGA_CRT_VSYNC	VGA_CRT_VSYNC	R557	2	DIS@	1	0_0402_5%	CRT_VSYNC
[14] VGA_CRT_DATA	VGA_CRT_DATA	R538	2	DIS@	1	0_0402_5%	CRT_DATA
[14] VGA_CRT_CLK	VGA_CRT_CLK	R556	2	DIS@	1	0_0402_5%	CRT_CLK

NOTE:
IF RS880M ONLY(NO MXM SUPPORT),
DAC_SDAT AND DAC_SCL DON'T
NEED LEVEL SHIFT, PU TO +5V DIRECTLY.
DAC_SDAT AND DAC_SCL ARE 5V TOLERANCE.

Close to Conn side

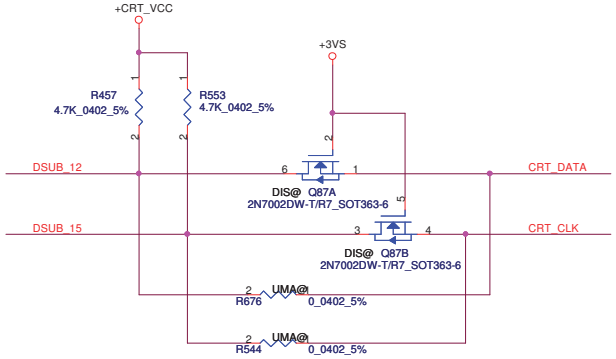

Security Classification	Compal Secret Data		Compal Electronics, Inc.
Issued Date	2008/10/06	Deciphered Date 2010/04/30	Title CRT Connector
THIS SHEET OF ENGINEERING DRAWING IS THE PROPRIETARY PROPERTY OF COMPAL ELECTRONICS, INC. AND CONTAINS CONFIDENTIAL AND TRADE SECRET INFORMATION. THIS SHEET MAY NOT BE TRANSFERED FROM THE CUSTODY OF THE COMPETENT DIVISION OF R&D DEPARTMENT EXCEPT AS AUTHORIZED BY COMPAL ELECTRONICS, INC. NEITHER THIS SHEET NOR THE INFORMATION IT CONTAINS MAY BE USED BY OR DISCLOSED TO ANY THIRD PARTY WITHOUT PRIOR WRITTEN CONSENT OF COMPAL ELECTRONICS, INC.			Size B / Document Number NAWE5 LA-5753P / Rev 1.A
			Date: Tuesday, May 18, 2010 / Sheet 25 of 48

WWW.AliSaler.Com

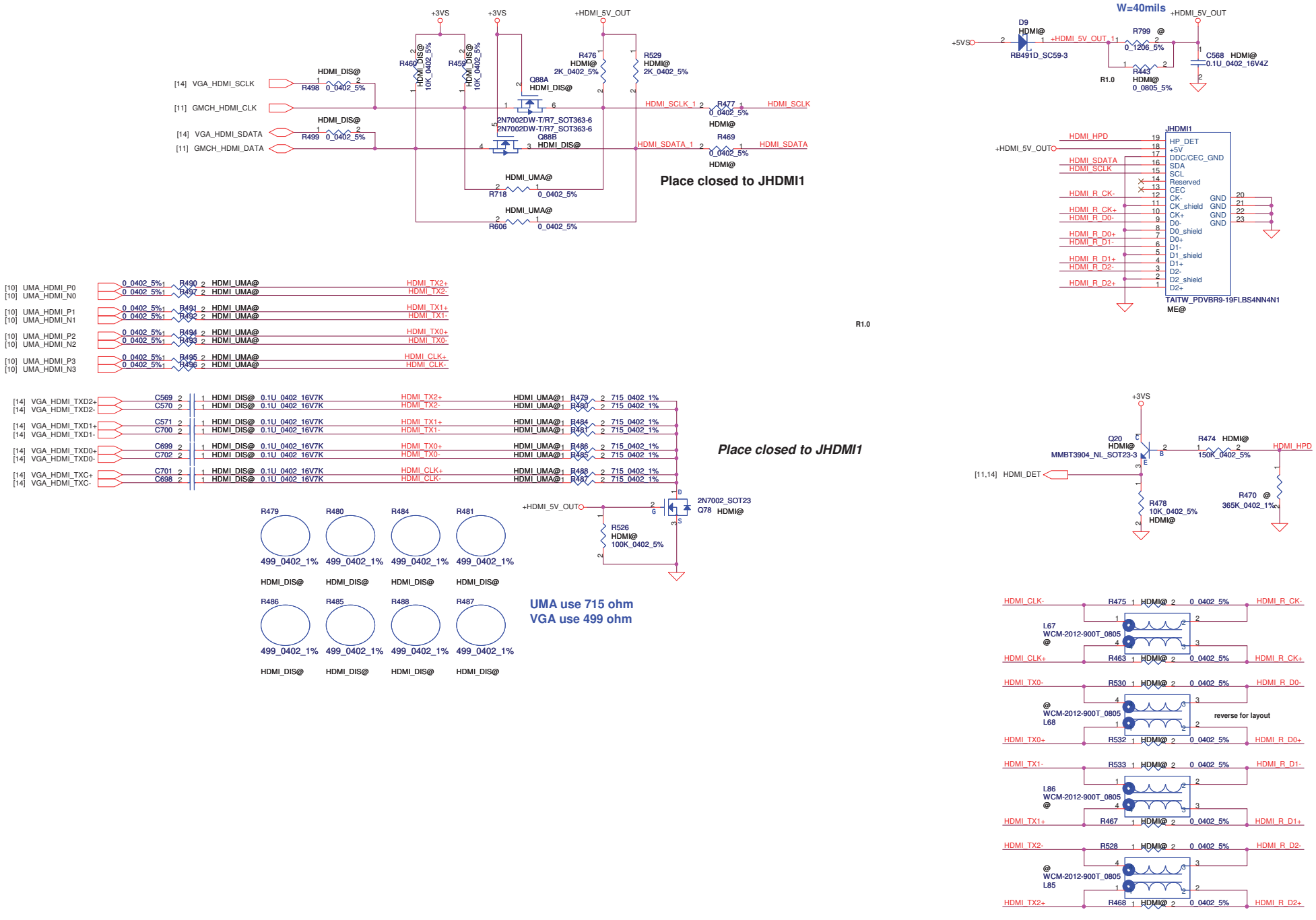

Security Classification	Compal Secret Data		
Issued Date	2008/10/06	Deciphered Date	2010/04/30

THIS SHEET OF ENGINEERING DRAWING IS THE PROPRIETARY PROPERTY OF COMPAL ELECTRONICS, INC. AND CONTAINS CONFIDENTIAL AND TRADE SECRET INFORMATION. THIS SHEET MAY NOT BE TRANSFERED FROM THE CUSTODY OF THE COMPETENT DIVISION OF R&D DEPARTMENT EXCEPT AS AUTHORIZED BY COMPAL ELECTRONICS, INC. NEITHER THIS SHEET NOR THE INFORMATION IT CONTAINS MAY BE USED BY OR DISCLOSED TO ANY THIRD PARTY WITHOUT PRIOR WRITTEN CONSENT OF COMPAL ELECTRONICS, INC.

Compal Electronics, Inc.

Title: HDMI Connector

Size: Custom | Document Number: NAWE5 LA-5753P | Rev: 1.A

Date: Tuesday, May 18, 2010 | Sheet 26 of 48

WWW.AliSaler.Com

LCD POWER CIRCUIT

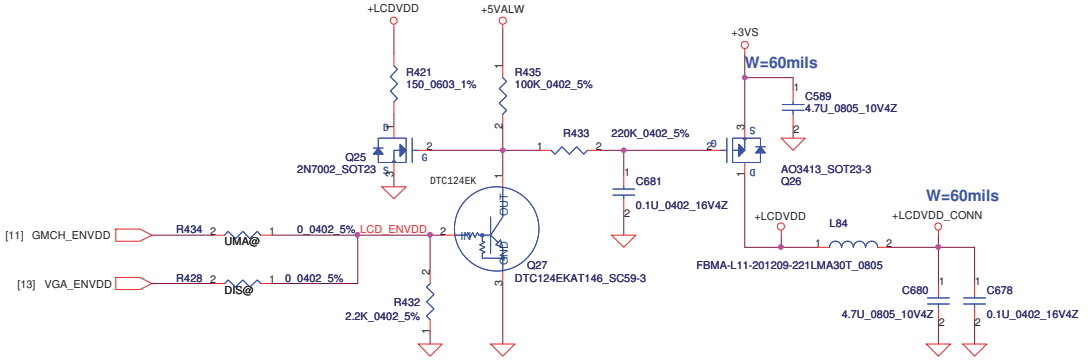

CMOS Camera

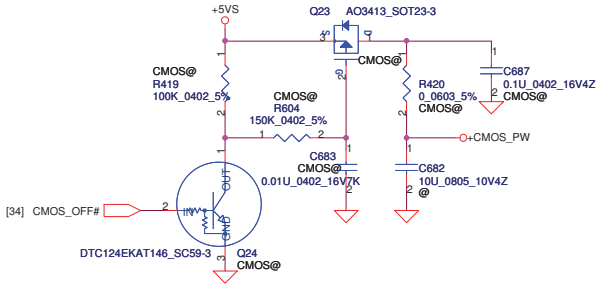

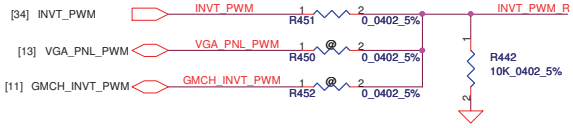

VGA ONLY

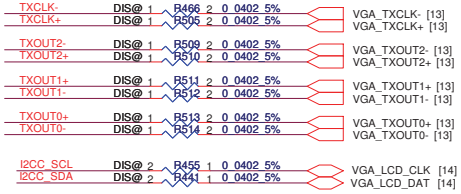

UMA ONLY

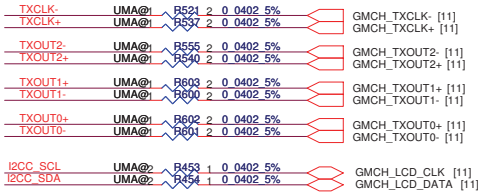

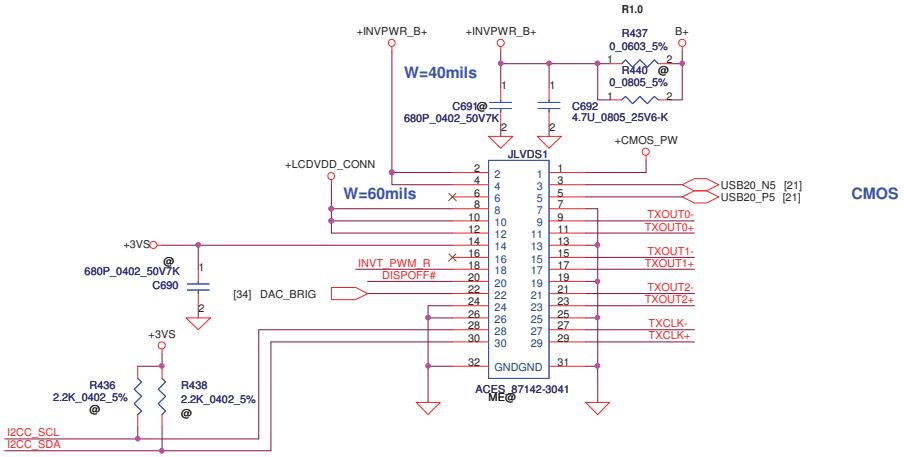

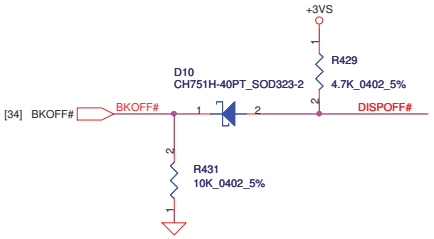

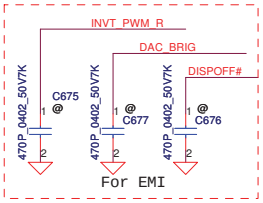

Security Classification	Compal Secret Data		
Issued Date	2007/10/15	Deciphered Date	2010/04/30

THIS SHEET OF ENGINEERING DRAWING IS THE PROPRIETARY PROPERTY OF COMPAL ELECTRONICS, INC. AND CONTAINS CONFIDENTIAL AND TRADE SECRET INFORMATION. THIS SHEET MAY NOT BE TRANSFERED FROM THE CUSTODY OF THE COMPETENT DIVISION OF R&D DEPARTMENT EXCEPT AS AUTHORIZED BY COMPAL ELECTRONICS, INC. NEITHER THIS SHEET NOR THE INFORMATION IT CONTAINS MAY BE USED BY OR DISCLOSED TO ANY THIRD PARTY WITHOUT PRIOR WRITTEN CONSENT OF COMPAL ELECTRONICS, INC.

Compal Electronics, Inc.

Title: **LVDS/CAMERA**

Size: Custom | Document Number: **NAWE5 LA-5753P** | Rev: 1.A

Date: Tuesday, May 18, 2010 | Sheet 27 of 48

WWW.AliSaler.Com

Mini-Express Card for WLAN/WiMAX(Half)

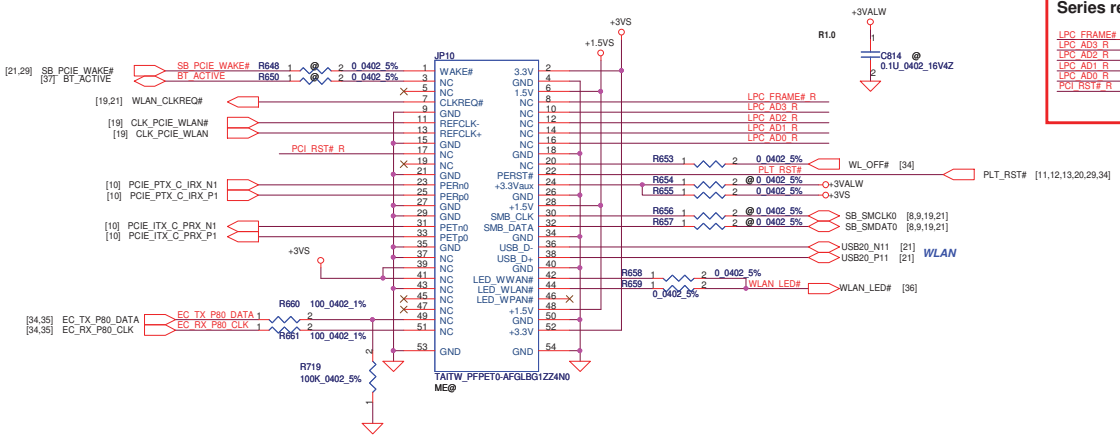

Reserve for SW mini-pcie debug card.
Series resistors closed to KBC side.

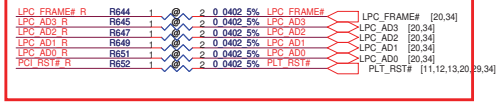

Mini-Express Card for WWAN(Full)

Mini-Express Card(WWAN 3G)

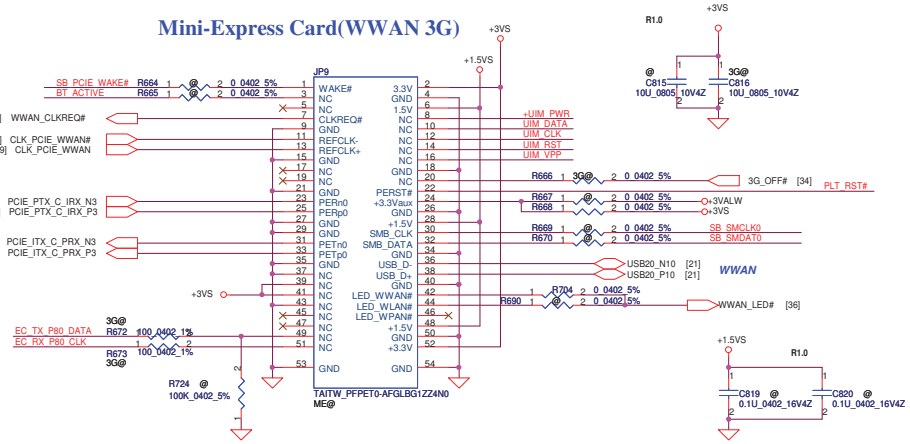

Vcc 3.3V +/- 8%
Peak Icc 2750mA
with max supply droop 50mA
Average Icc 1000mA

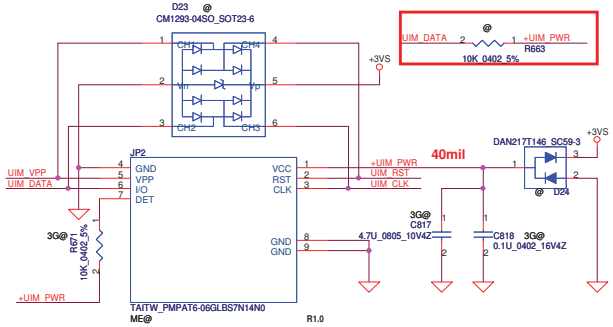

Express Card Power Switch

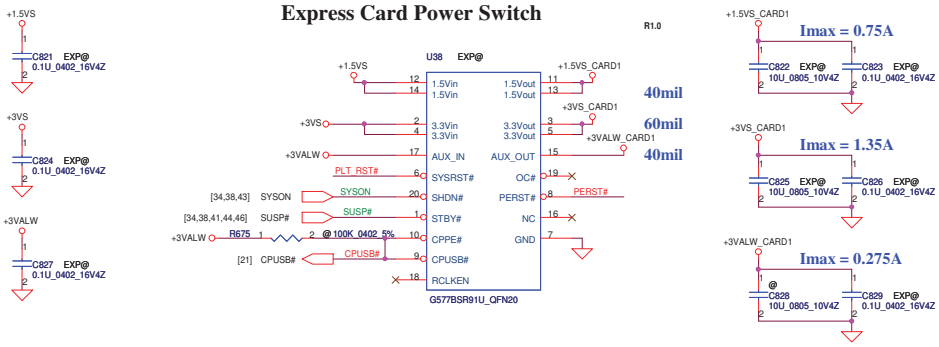

New Card 34mm Socket (Left/TOP)

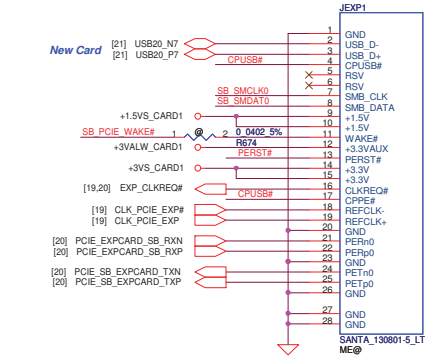

Security Classification	Compal Secret Data		
Issued Date	2007/10/15	Deciphered Date	2010/04/30

THIS SHEET OF ENGINEERING DRAWING IS THE PROPRIETARY PROPERTY OF COMPAL ELECTRONICS, INC. AND CONTAINS CONFIDENTIAL AND TRADE SECRET INFORMATION. THIS SHEET MAY NOT BE TRANSFERED FROM THE CUSTODY OF THE COMPETENT DIVISION OF R&D DEPARTMENT EXCEPT AS AUTHORIZED BY COMPAL ELECTRONICS, INC. NEITHER THIS SHEET NOR THE INFORMATION IT CONTAINS MAY BE USED BY OR DISCLOSED TO ANY THIRD PARTY WITHOUT PRIOR WRITTEN CONSENT OF COMPAL ELECTRONICS, INC.

Compal Electronics, Inc.

Title: **Mini-Card/Nwe Card/SIM**

Size	Document Number	Rev
	NAWE5 LA-5753P	1.A

Date: Tuesday, May 18, 2010 Sheet 28 of 48

WWW.AliSaler.Com

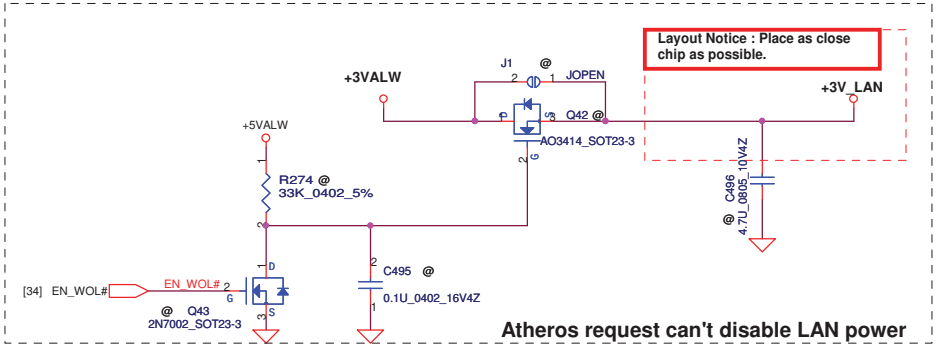

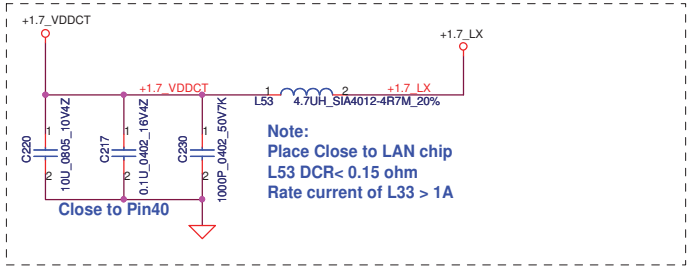

Power On strapping

Pin	Description	Chip Default
LED0	H:Over Clock Enable L:Over Clock Disable *	H
	H:SWR Switch mode regulator Select * AR8151 Pin23=LED2. AR8152, Pin23 is CLKREQ	--

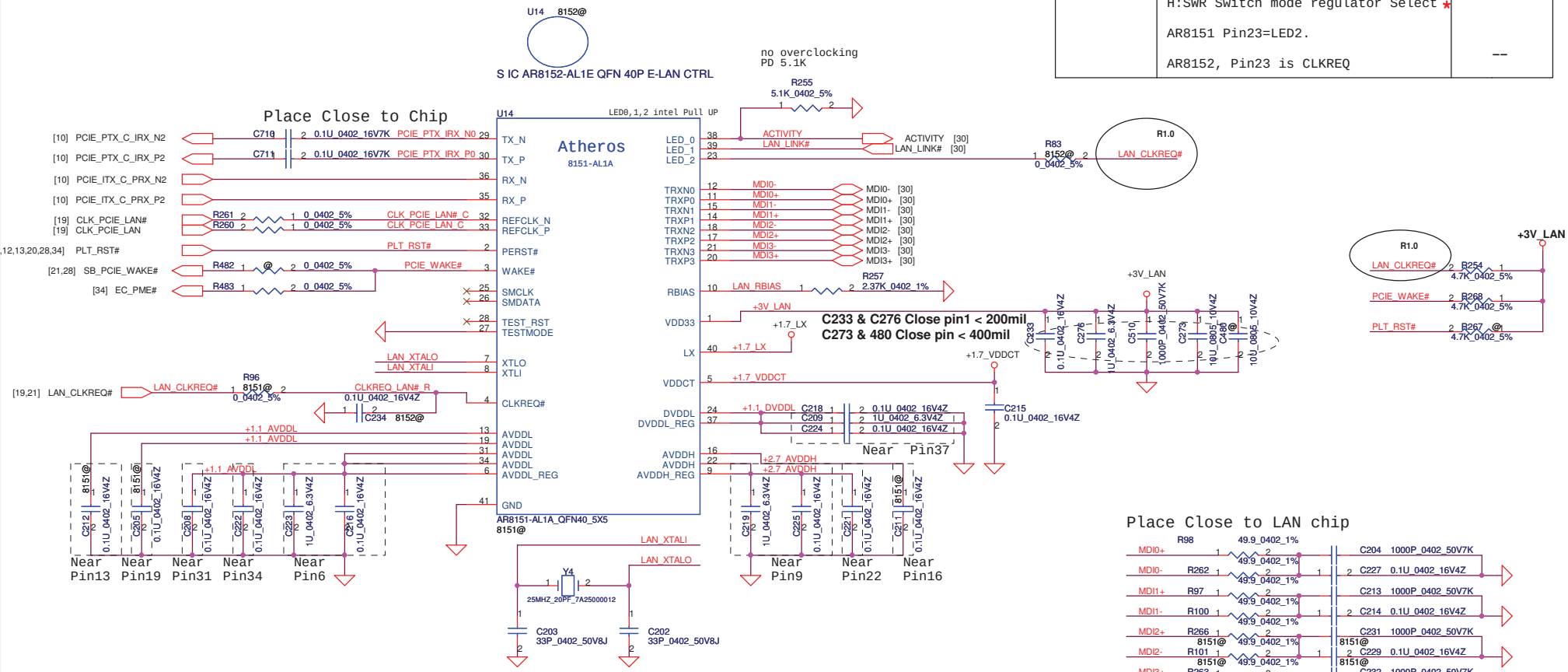

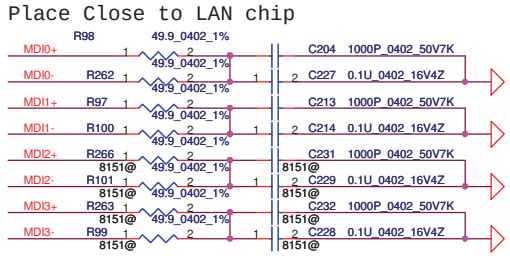

8152 no mount MDI3+,MDI3-,MDI2-,MDI2+ resister and cap

For AR8152, pin23 is the LDO output. Mount C234 and no mount R96.close to this pin4

For AR8151, pin4 is the CLKREQn pin, mount R96 and no mount C234.close to this pin4

Security Classification	Compal Secret Data			Compal Electronics, Inc.
Issued Date	2006/08/04	Deciphered Date	2010/04/30	Title: LAN-AR8151/8152

THIS SHEET OF ENGINEERING DRAWING IS THE PROPRIETARY PROPERTY OF COMPAL ELECTRONICS, INC. AND CONTAINS CONFIDENTIAL AND TRADE SECRET INFORMATION. THIS SHEET MAY NOT BE TRANSFERED FROM THE CUSTODY OF THE COMPETENT DIVISION OF R&D DEPARTMENT EXCEPT AS AUTHORIZED BY COMPAL ELECTRONICS, INC. NEITHER THIS SHEET NOR THE INFORMATION IT CONTAINS MAY BE USED BY OR DISCLOSED TO ANY THIRD PARTY WITHOUT PRIOR WRITTEN CONSENT OF COMPAL ELECTRONICS, INC.

Size	Document Number	Rev
Custom	NAWE5 LA-5753P	1.A

Date: Tuesday, May 18, 2010 Sheet 29 of 48

WWW.AliSaler.Com

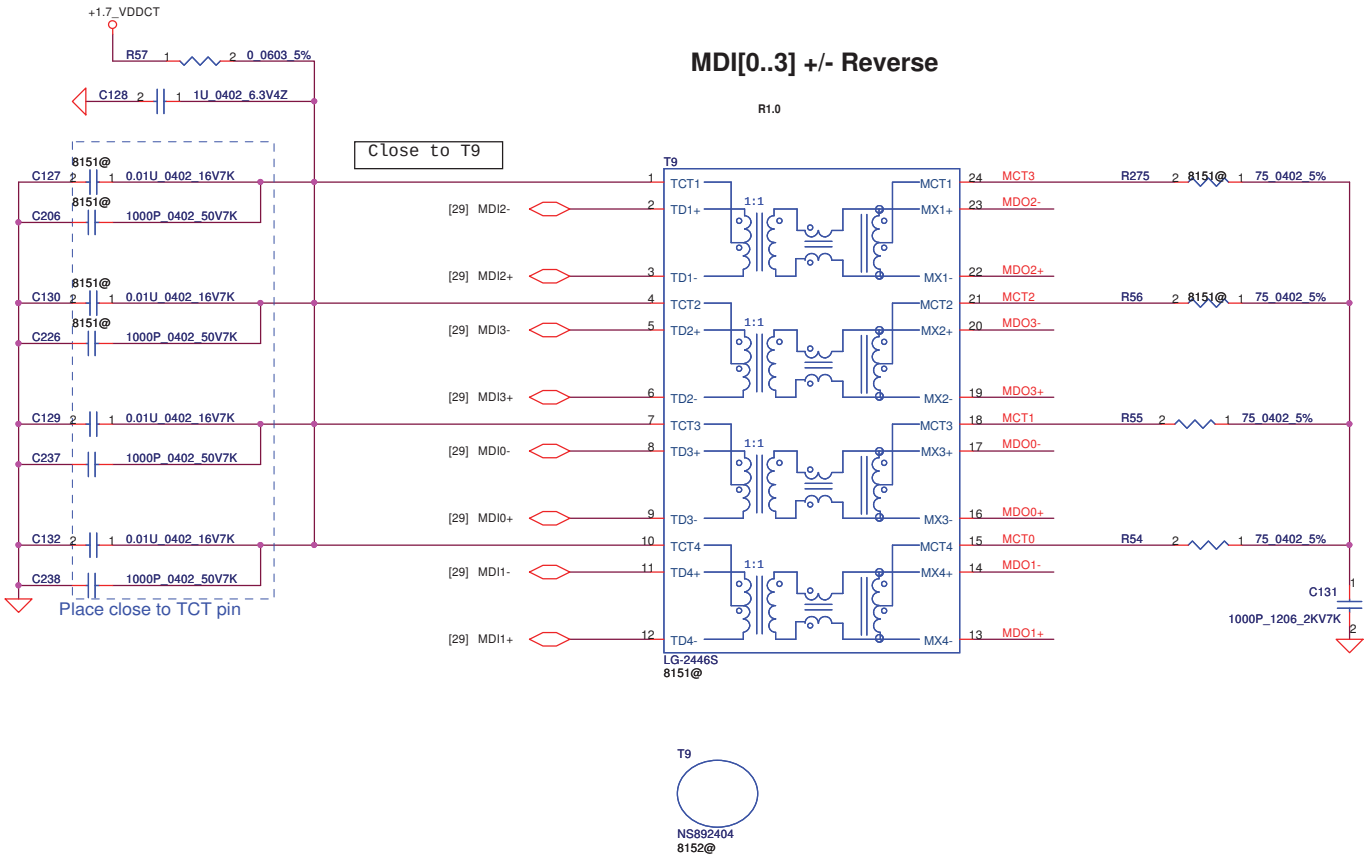

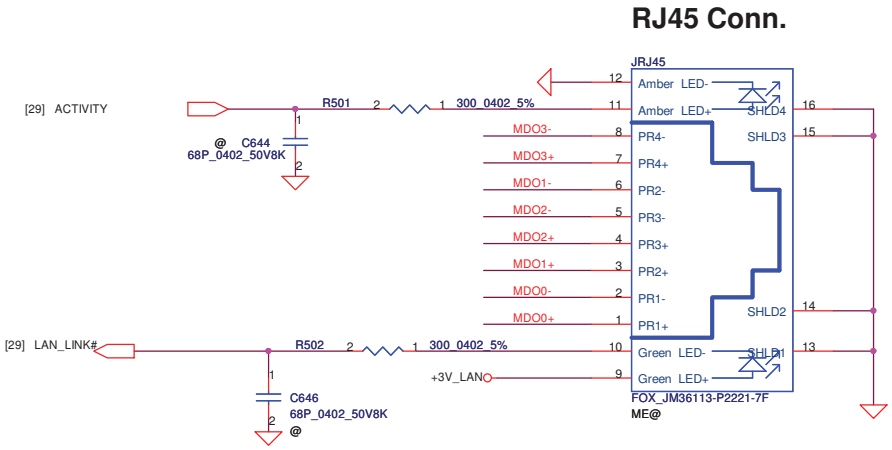

Security Classification	Compal Secret Data		
Issued Date	2009/03/20	Deciphered Date	2010/04/30

THIS SHEET OF ENGINEERING DRAWING IS THE PROPRIETARY PROPERTY OF COMPAL ELECTRONICS, INC. AND CONTAINS CONFIDENTIAL AND TRADE SECRET INFORMATION. THIS SHEET MAY NOT BE TRANSFERED FROM THE CUSTODY OF THE COMPETENT DIVISION OF R&D DEPARTMENT EXCEPT AS AUTHORIZED BY COMPAL ELECTRONICS, INC. NEITHER THIS SHEET NOR THE INFORMATION IT CONTAINS MAY BE USED BY OR DISCLOSED TO ANY THIRD PARTY WITHOUT PRIOR WRITTEN CONSENT OF COMPAL ELECTRONICS, INC.

Compal Electronics, Inc.

Title: **LAN_Transformer**

Size: Custom | Document Number: **NAWE5 LA-5753P** | Rev: 1.A

Date: Tuesday, May 18, 2010 | Sheet 30 of 48

WWW.AliSaler.Com

SMSC thermal sensor placed near by VRAM

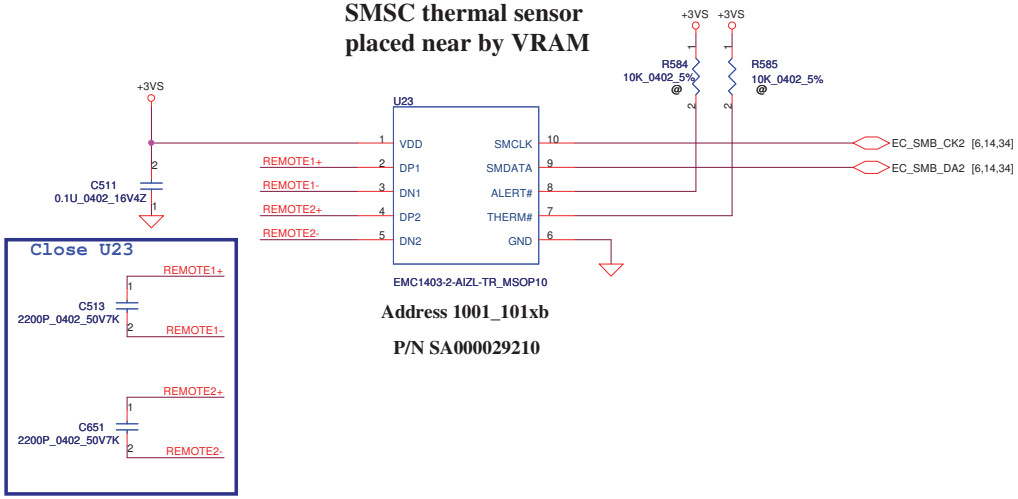

Address 1001_101xb

P/N SA000029210

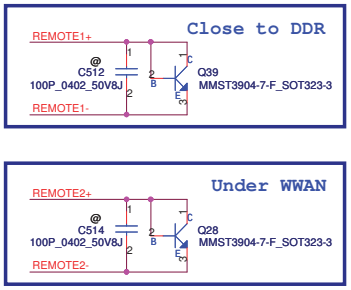

REMOTE1,2+/-:
Trace width/space:10/10 mil
Trace length:<8"

FAN1 Conn

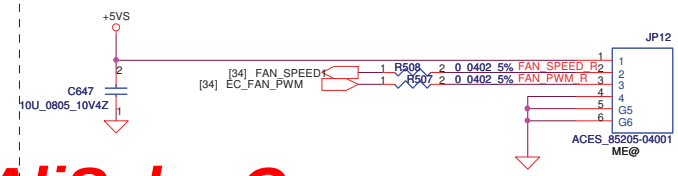

Security Classification	Compal Secret Data			Compal Electronics, Inc.
Issued Date	2008/10/06	Deciphered Date	2010/04/30	Title: EMC1403_sensor/FAN
				Size: B; Document Number: NAWE5 LA-5753P; Rev: 1.A
				Date: Tuesday, May 18, 2010; Sheet 31 of 48

THIS SHEET OF ENGINEERING DRAWING IS THE PROPRIETARY PROPERTY OF COMPAL ELECTRONICS, INC. AND CONTAINS CONFIDENTIAL AND TRADE SECRET INFORMATION. THIS SHEET MAY NOT BE TRANSFERRED FROM THE CUSTODY OF THE COMPETENT DIVISION OF R&D DEPARTMENT EXCEPT AS AUTHORIZED BY COMPAL ELECTRONICS, INC. NEITHER THIS SHEET NOR THE INFORMATION IT CONTAINS MAY BE USED BY OR DISCLOSED TO ANY THIRD PARTY WITHOUT PRIOR WRITTEN CONSENT OF COMPAL ELECTRONICS, INC.

WWW.AliSaler.Com

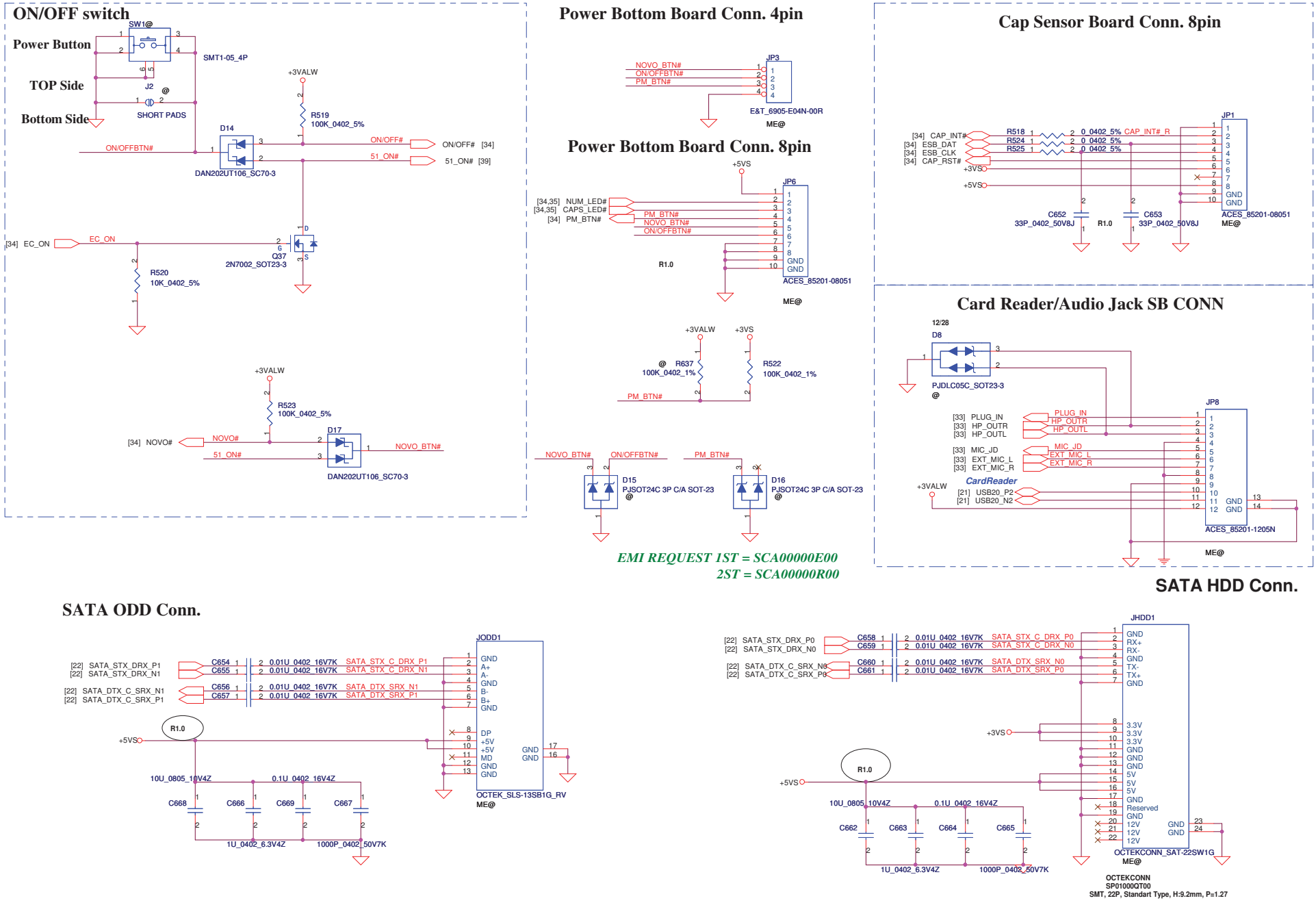

Security Classification	Compal Secret Data		
Issued Date	2007/10/15	Deciphered Date	2010/04/30

THIS SHEET OF ENGINEERING DRAWING IS THE PROPRIETARY PROPERTY OF COMPAL ELECTRONICS, INC. AND CONTAINS CONFIDENTIAL AND TRADE SECRET INFORMATION. THIS SHEET MAY NOT BE TRANSFERRED FROM THE CUSTODY OF THE COMPETENT DIVISION OF R&D DEPARTMENT EXCEPT AS AUTHORIZED BY COMPAL ELECTRONICS, INC. NEITHER THIS SHEET NOR THE INFORMATION IT CONTAINS MAY BE USED BY OR DISCLOSED TO ANY THIRD PARTY WITHOUT PRIOR WRITTEN CONSENT OF COMPAL ELECTRONICS, INC.

Compal Electronics, Inc.

Title: HDD/ODD Connector

Size: Custom | Document Number: NAWE5 LA-5753P | Rev: 1.A

Date: Tuesday, May 18, 2010 | Sheet 32 of 48

WWW.AliSaler.Com

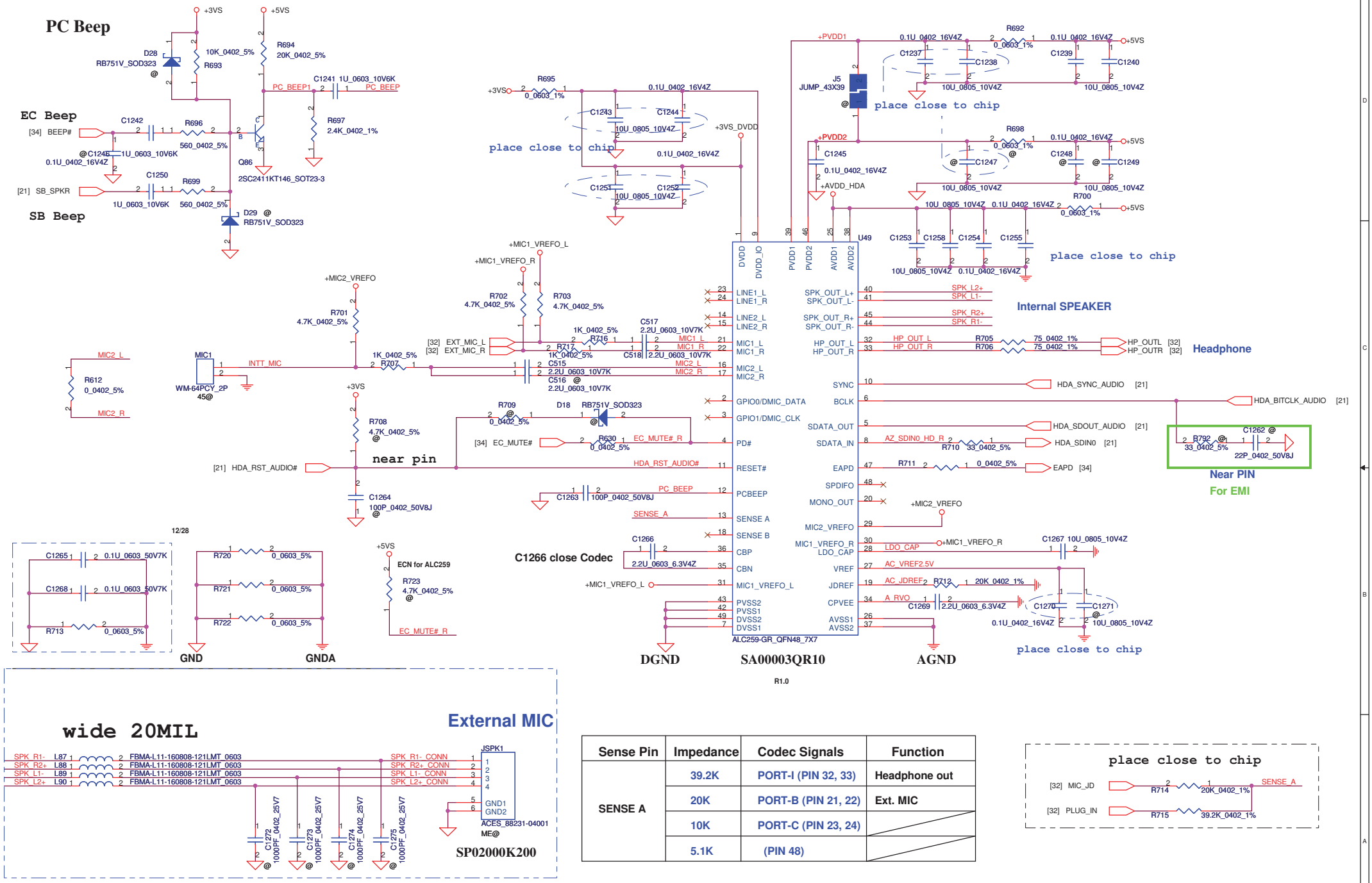

Sense Pin	Impedance	Codec Signals	Function
SENSE A	39.2K	PORT-I (PIN 32, 33)	Headphone out
	20K	PORT-B (PIN 21, 22)	Ext. MIC
	10K	PORT-C (PIN 23, 24)	
	5.1K	(PIN 48)	

Security Classification	Compal Secret Data		
Issued Date	2008/03/25	Deciphered Date	2010/04/30

THIS SHEET OF ENGINEERING DRAWING IS THE PROPRIETARY PROPERTY OF COMPAL ELECTRONICS, INC. AND CONTAINS CONFIDENTIAL AND TRADE SECRET INFORMATION. THIS SHEET MAY NOT BE TRANSFERED FROM THE CUSTODY OF THE COMPETENT DIVISION OF R&D DEPARTMENT EXCEPT AS AUTHORIZED BY COMPAL ELECTRONICS, INC. NEITHER THIS SHEET NOR THE INFORMATION IT CONTAINS MAY BE USED BY OR DISCLOSED TO ANY THIRD PARTY WITHOUT PRIOR WRITTEN CONSENT OF COMPAL ELECTRONICS, INC.

Compal Electronics,Ltd.

Title: ALC259 Codec

Size: Custom | Document Number: NAWE5 LA-5753P | Rev: 1.A

Date: Tuesday, May 18, 2010 | Sheet 33 of 48

WWW.AliSaler.Com

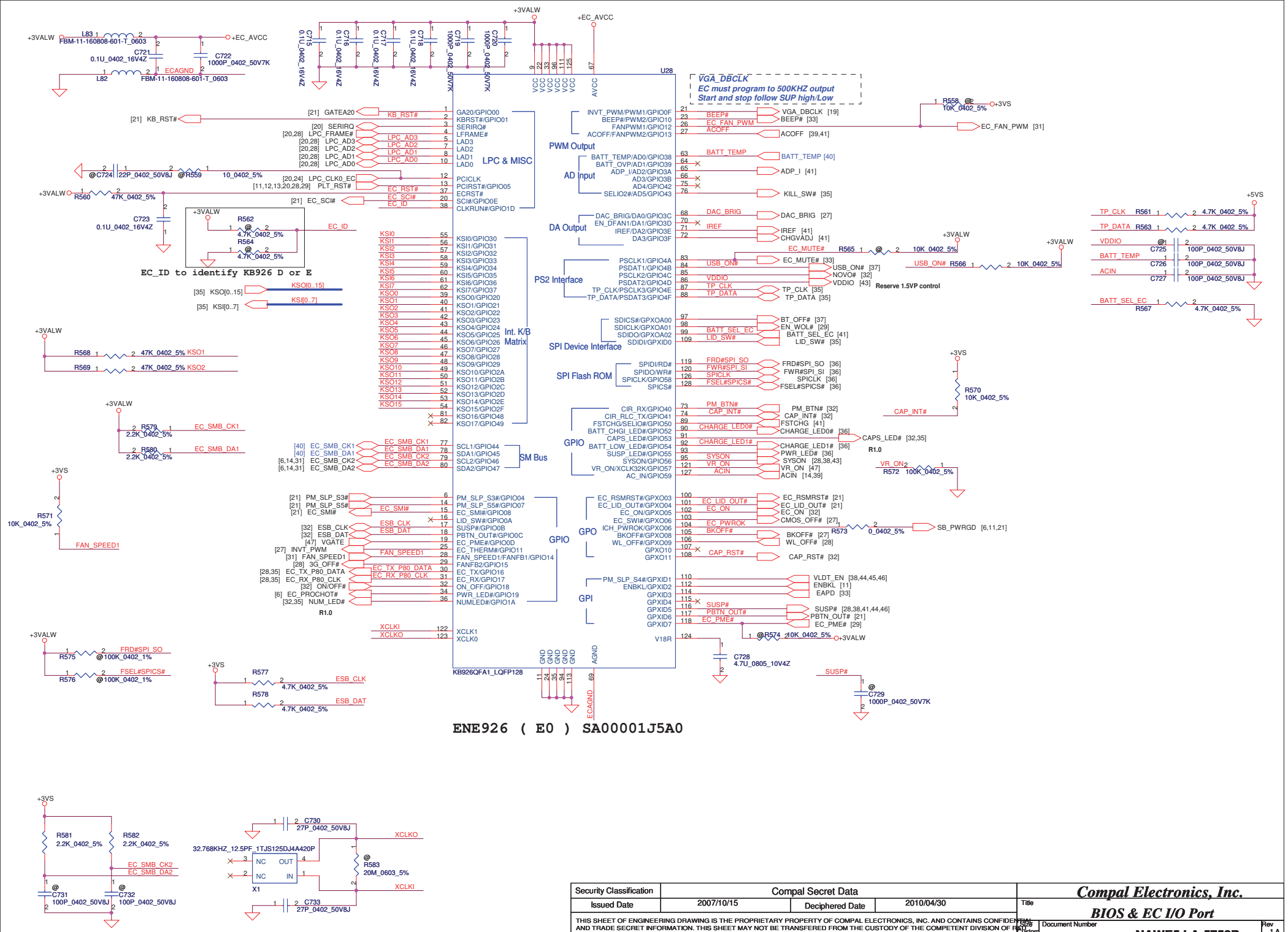

Security Classification	Compal Secret Data		
Issued Date	2007/10/15	Deciphered Date	2010/04/30

THIS SHEET OF ENGINEERING DRAWING IS THE PROPRIETARY PROPERTY OF COMPAL ELECTRONICS, INC. AND CONTAINS CONFIDENTIAL AND TRADE SECRET INFORMATION. THIS SHEET MAY NOT BE TRANSFERED FROM THE CUSTODY OF THE COMPETENT DIVISION OF R&D DEPARTMENT EXCEPT AS AUTHORIZED BY COMPAL ELECTRONICS, INC. NEITHER THIS SHEET NOR THE INFORMATION IT CONTAINS MAY BE USED BY OR DISCLOSED TO ANY THIRD PARTY WITHOUT PRIOR WRITTEN CONSENT OF COMPAL ELECTRONICS, INC.

Compal Electronics, Inc.

Title: **BIOS & EC I/O Port**

Size: Custom | Document Number: **NAWE5 LA-5753P** | Rev: 1.A

Date: Tuesday, May 18, 2010 | Sheet 34 of 48

WWW.AliSaler.Com

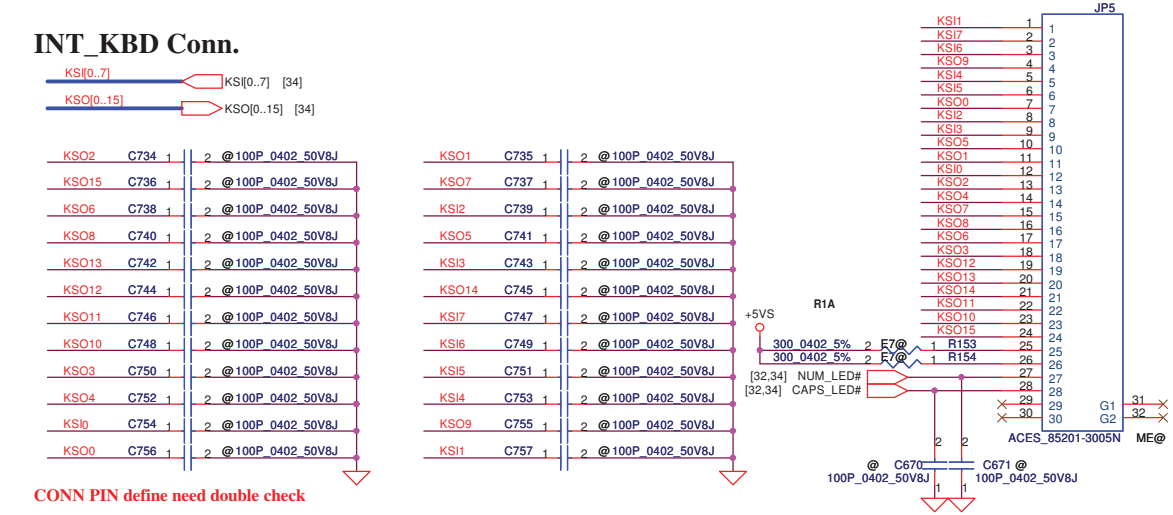

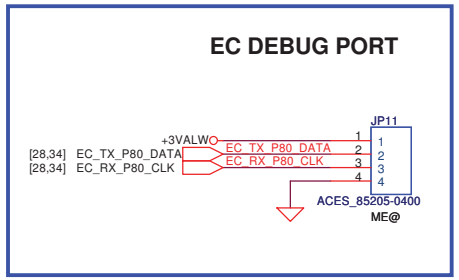

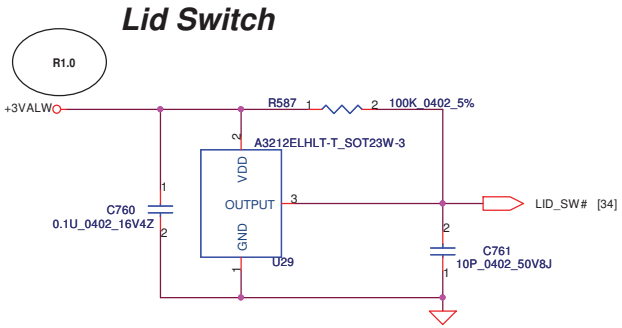

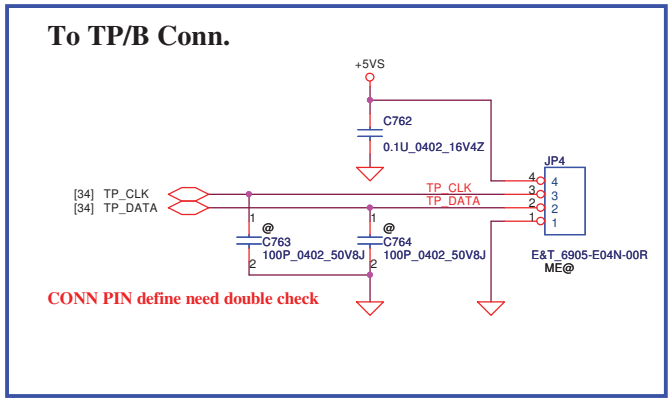

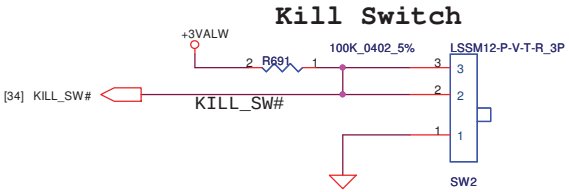

Kill

STATUS	
1,2(LOW)	OFF
2,3(HI)	ON

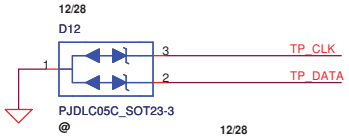

Security Classification	Compal Secret Data		
Issued Date	2007/10/15	Deciphered Date	2010/04/30

THIS SHEET OF ENGINEERING DRAWING IS THE PROPRIETARY PROPERTY OF COMPAL ELECTRONICS, INC. AND CONTAINS CONFIDENTIAL AND TRADE SECRET INFORMATION. THIS SHEET MAY NOT BE TRANSFERED FROM THE CUSTODY OF THE COMPETENT DIVISION OF R&D DEPARTMENT EXCEPT AS AUTHORIZED BY COMPAL ELECTRONICS, INC. NEITHER THIS SHEET NOR THE INFORMATION IT CONTAINS MAY BE USED BY OR DISCLOSED TO ANY THIRD PARTY WITHOUT PRIOR WRITTEN CONSENT OF COMPAL ELECTRONICS, INC.

Compal Electronics, Inc.

Title: **KB /SW /LPC Debug Conn.**

Size: B | Document Number: **NAWE5 LA-5753P** | Rev: 1.A

Date: Tuesday, May 18, 2010 | Sheet 35 of 48

WWW.AliSaler.Com

SA00002TO00 pakage 200mil
S IC FL 16MBIT MX25L1605AM2C-12G SO8 ROM

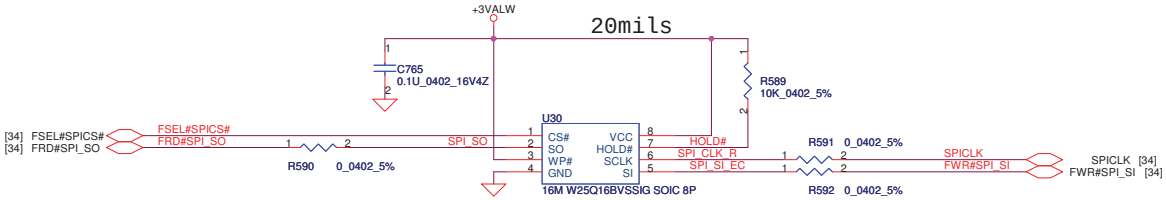

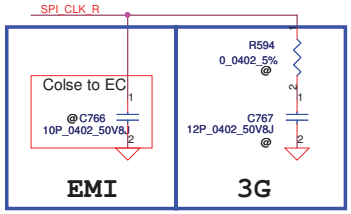

LED

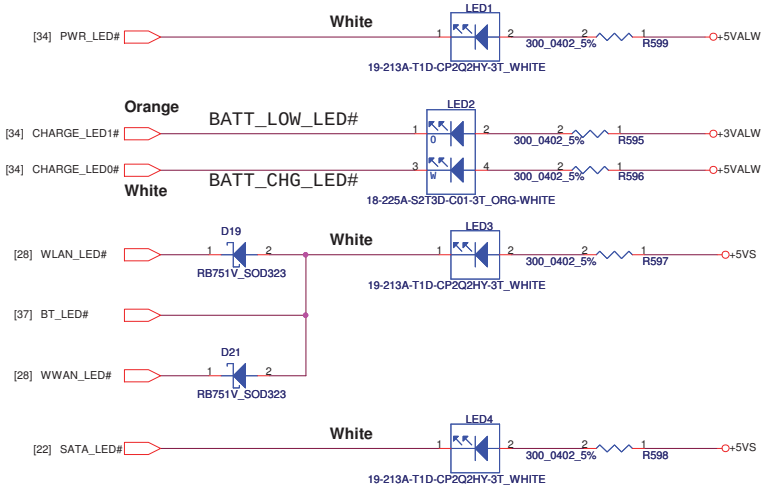

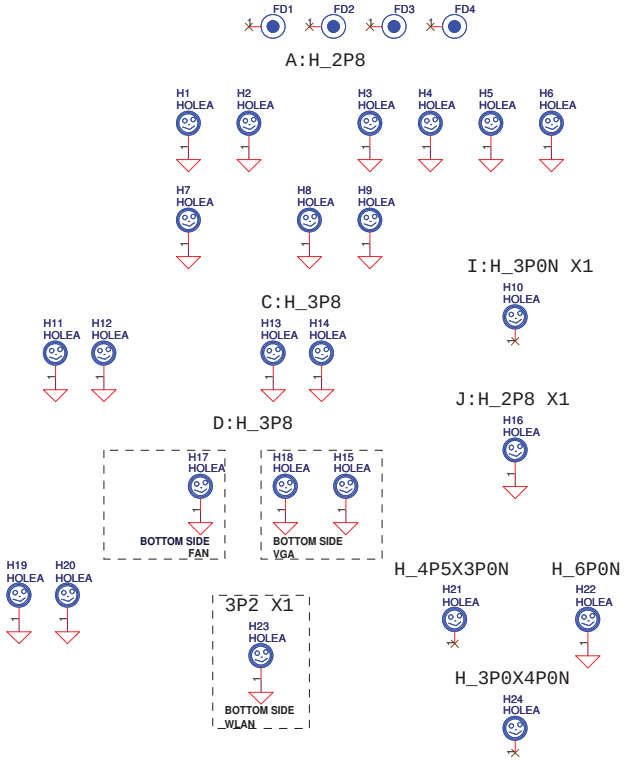

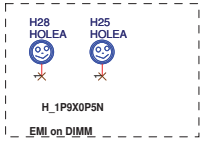

Security Classification	Compal Secret Data		
Issued Date	2007/10/15	Deciphered Date	2010/04/30

THIS SHEET OF ENGINEERING DRAWING IS THE PROPRIETARY PROPERTY OF COMPAL ELECTRONICS, INC. AND CONTAINS CONFIDENTIAL AND TRADE SECRET INFORMATION. THIS SHEET MAY NOT BE TRANSFERED FROM THE CUSTODY OF THE COMPETENT DIVISION OF R&D DEPARTMENT EXCEPT AS AUTHORIZED BY COMPAL ELECTRONICS, INC. NEITHER THIS SHEET NOR THE INFORMATION IT CONTAINS MAY BE USED BY OR DISCLOSED TO ANY THIRD PARTY WITHOUT PRIOR WRITTEN CONSENT OF COMPAL ELECTRONICS, INC.

Compal Electronics, Inc.

Title: **LED/EC SPI ROM**

Size: B | Document Number: **NAWE5 LA-5753P** | Rev: 1.A

Date: Tuesday, May 18, 2010 | Sheet 36 of 48

WWW.AliSaler.Com

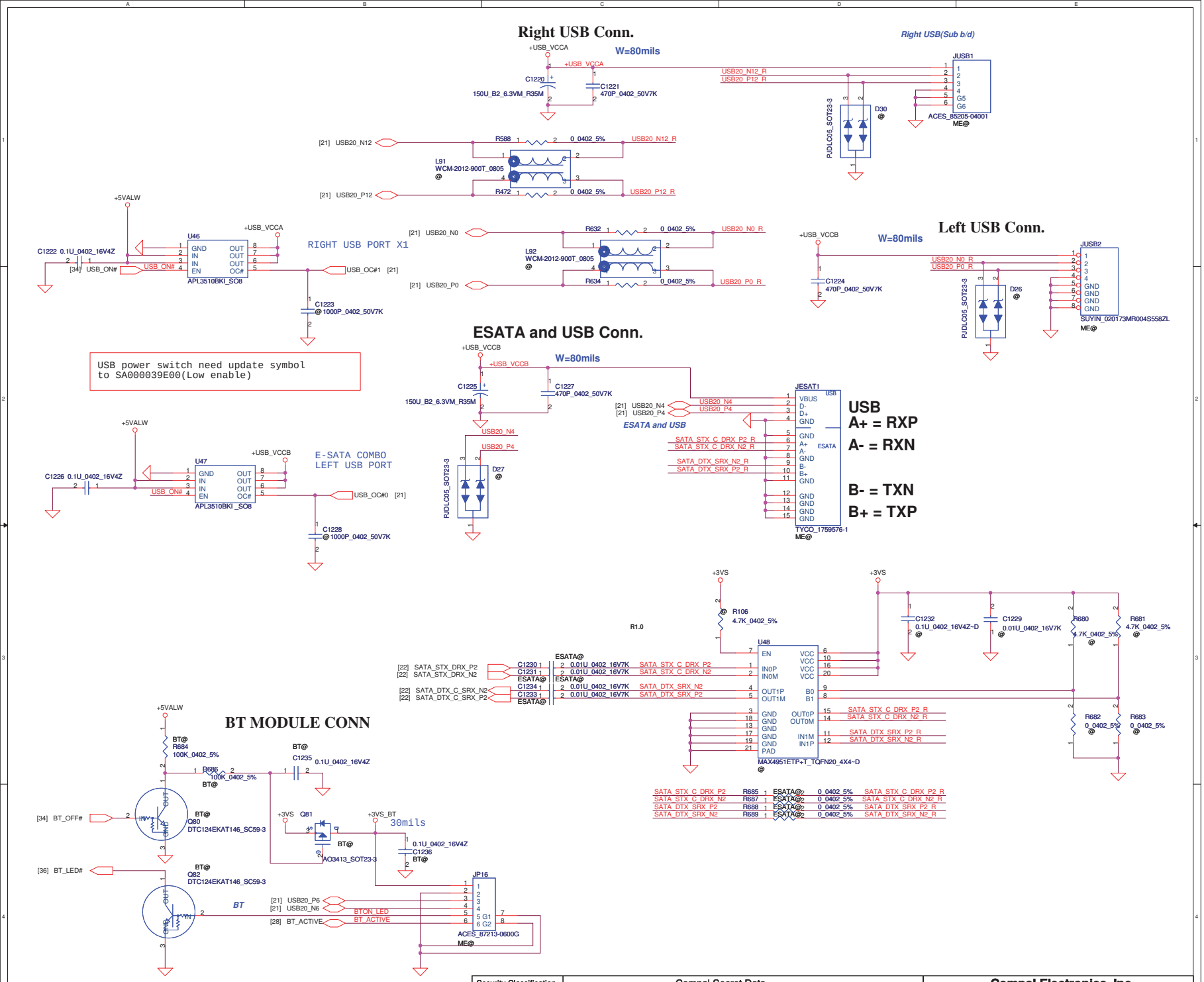

Security Classification	Compal Secret Data		
Issued Date	2006/08/18	Deciphered Date	2010/04/30

THIS SHEET OF ENGINEERING DRAWING IS THE PROPRIETARY PROPERTY OF COMPAL ELECTRONICS, INC. AND CONTAINS CONFIDENTIAL AND TRADE SECRET INFORMATION. THIS SHEET MAY NOT BE TRANSFERED FROM THE CUSTODY OF THE COMPETENT DIVISION OF R&D DEPARTMENT EXCEPT AS AUTHORIZED BY COMPAL ELECTRONICS, INC. NEITHER THIS SHEET NOR THE INFORMATION IT CONTAINS MAY BE USED BY OR DISCLOSED TO ANY THIRD PARTY WITHOUT PRIOR WRITTEN CONSENT OF COMPAL ELECTRONICS, INC.

Compal Electronics, Inc.

Title: USB ports/BT/E-SATA

Size: Custom | Document Number: NAWE5 LA-5753P | Rev: 1.A

Date: Tuesday, May 18, 2010 | Sheet 37 of 48

WWW.AliSaler.Com

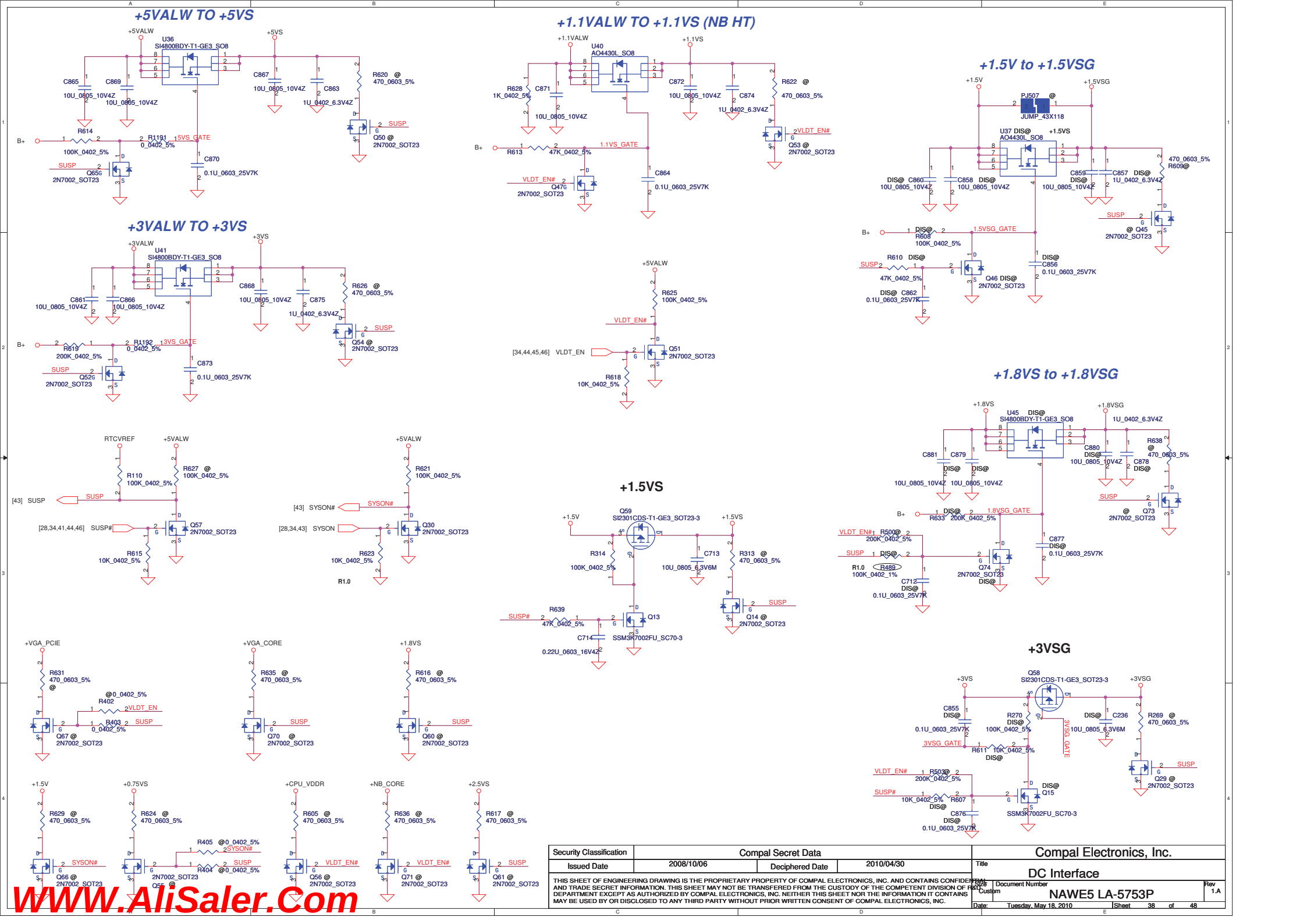
+5VALW TO +5VS
U36
SI4800BDY-T1-GE3_SO8
+5VALW
+5VS
C865
10U_0805_10V4Z
C869
10U_0805_10V4Z
C867
10U_0805_10V4Z
C863
1U_0402_6.3V4Z
R620 @
470_0603_5%
SUSP
Q50 @
2N7002_SOT23
B+
R614
100K_0402_5%
R1191
0_0402_5%
5VS_GATE
C870
0.1U_0603_25V7K
SUSP
Q65
2N7002_SOT23
+1.1VALW TO +1.1VS (NB HT)
U40
AO4430L_SO8
+1.1VALW
+1.1VS
R628
1K_0402_5%
C871
10U_0805_10V4Z
C872
10U_0805_10V4Z
C874
1U_0402_6.3V4Z
R622 @
470_0603_5%
VLDT_EN#
Q53 @
2N7002_SOT23
B+
R613
47K_0402_5%
1.1VS_GATE
C864
0.1U_0603_25V7K
VLDT_EN#
Q47
2N7002_SOT23
+1.5V to +1.5VSG
+1.5V
+1.5VSG
PJ507 @
JUMP_43X118
U37 DIS@
AO4430L_SO8
+1.5VS
DIS@ C860
10U_0805_10V4Z
C858 DIS@
10U_0805_10V4Z
C859 DIS@
10U_0805_10V4Z
C857 DIS@
1U_0402_6.3V4Z
470_0603_5%
R609@
SUSP
@ Q45
2N7002_SOT23
B+
DIS@
R608
100K_0402_5%
1.5VSG_GATE
R610 DIS@
47K_0402_5%
SUSP
Q46 DIS@
2N7002_SOT23
DIS@
C856
0.1U_0603_25V7K
DIS@ C862
0.1U_0603_25V7K
+3VALW TO +3VS
U41
SI4800BDY-T1-GE3_SO8
+3VALW
+3VS
C861
10U_0805_10V4Z
C866
10U_0805_10V4Z
C868
10U_0805_10V4Z
C875
1U_0402_6.3V4Z
R626 @
470_0603_5%
SUSP
Q54 @
2N7002_SOT23
B+
R619
200K_0402_5%
R1192
0_0402_5%
3VS_GATE
C873
0.1U_0603_25V7K
SUSP
Q52
2N7002_SOT23
+5VALW
R625
100K_0402_5%
VLDT_EN#
[34,44,45,46] VLDT_EN
Q51
2N7002_SOT23
R618
10K_0402_5%
+1.8VS to +1.8VSG
+1.8VS
U45 DIS@
SI4800BDY-T1-GE3_SO8
+1.8VSG
1U_0402_6.3V4Z
C881
C879
DIS@
DIS@
10U_0805_10V4Z
10U_0805_10V4Z
C880
DIS@
10U_0805_10V4Z
C878
DIS@
R638
@
470_0603_5%
SUSP
@ Q73
2N7002_SOT23
B+
DIS@
R633
200K_0402_5%
1.8VSG_GATE
VLDT_EN#
R500@
200K_0402_5%
SUSP
DIS@
R1.0
R489
100K_0402_1%
Q74
2N7002_SOT23
DIS@
C877
DIS@
0.1U_0603_25V7K
C712
DIS@
0.1U_0603_25V7K
RTCVREF
+5VALW
R110
100K_0402_5%
R627 @
100K_0402_5%
[43] SUSP
SUSP
[28,34,41,44,46] SUSP#
Q57
2N7002_SOT23
R615
10K_0402_5%
+5VALW
R621
100K_0402_5%
[43] SYSON#
SYSON#
[28,34,43] SYSON
Q30
2N7002_SOT23
R623
10K_0402_5%
R1.0
+1.5VS
+1.5V
Q59
SI2301CDS-T1-GE3_SOT23-3
+1.5VS
R314
100K_0402_5%
C713
10U_0805_6.3V6M
R313 @
470_0603_5%
SUSP
Q14 @
2N7002_SOT23
SUSP#
R639
47K_0402_5%
Q13
SSM3K7002FU_SC70-3
C714
0.22U_0603_16V4Z
+3VSG
+3VS
Q58
SI2301CDS-T1-GE3_SOT23-3
+3VSG
C855
DIS@
0.1U_0603_25V7K
R270
DIS@
100K_0402_5%
DIS@
C236
10U_0805_6.3V6M
R269 @
470_0603_5%
3VSG_GATE
R611
10K_0402_5%
DIS@
SUSP
Q29 @
2N7002_SOT23
VLDT_EN#
R503@
200K_0402_5%
SUSP#
10K_0402_5%
R607
DIS@
DIS@
Q15
SSM3K7002FU_SC70-3
C876
DIS@
0.1U_0603_25V7K
+VGA_PCIE
R631
470_0603_5%
@
@0_0402_5%
R402
VLDT_EN
R403
0_0402_5%
SUSP
Q67 @
2N7002_SOT23
+VGA_CORE
R635 @
470_0603_5%
SUSP
Q70 @
2N7002_SOT23
+1.8VS
R616 @
470_0603_5%
SUSP
Q60 @
2N7002_SOT23
+1.5V
R629 @
470_0603_5%
SYSON#
Q66 @
2N7002_SOT23
+0.75VS
R624 @
470_0603_5%
R405 @0_0402_5%
SYSON#
SUSP
R404 @0_0402_5%
2N7002_SOT23
Q55 @
+CPU_VDDR
R605 @
470_0603_5%
VLDT_EN#
Q56 @
2N7002_SOT23
+NB_CORE
R636 @
470_0603_5%
VLDT_EN#
Q71 @
2N7002_SOT23
+2.5VS
R617 @
470_0603_5%
SUSP
Q61 @
2N7002_SOT23
Security Classification
Compal Secret Data
Issued Date
2008/10/06
Deciphered Date
2010/04/30
THIS SHEET OF ENGINEERING DRAWING IS THE PROPRIETARY PROPERTY OF COMPAL ELECTRONICS, INC. AND CONTAINS CONFIDENTIAL AND TRADE SECRET INFORMATION. THIS SHEET MAY NOT BE TRANSFERED FROM THE CUSTODY OF THE COMPETENT DIVISION OF R&D DEPARTMENT EXCEPT AS AUTHORIZED BY COMPAL ELECTRONICS, INC. NEITHER THIS SHEET NOR THE INFORMATION IT CONTAINS MAY BE USED BY OR DISCLOSED TO ANY THIRD PARTY WITHOUT PRIOR WRITTEN CONSENT OF COMPAL ELECTRONICS, INC.
Compal Electronics, Inc.
Title
DC Interface
Size
Custom
Document Number
NAWE5 LA-5753P
Rev
1.A
Date:
Tuesday, May 18, 2010
Sheet
38
of
48
WWW.AliSaler.Com

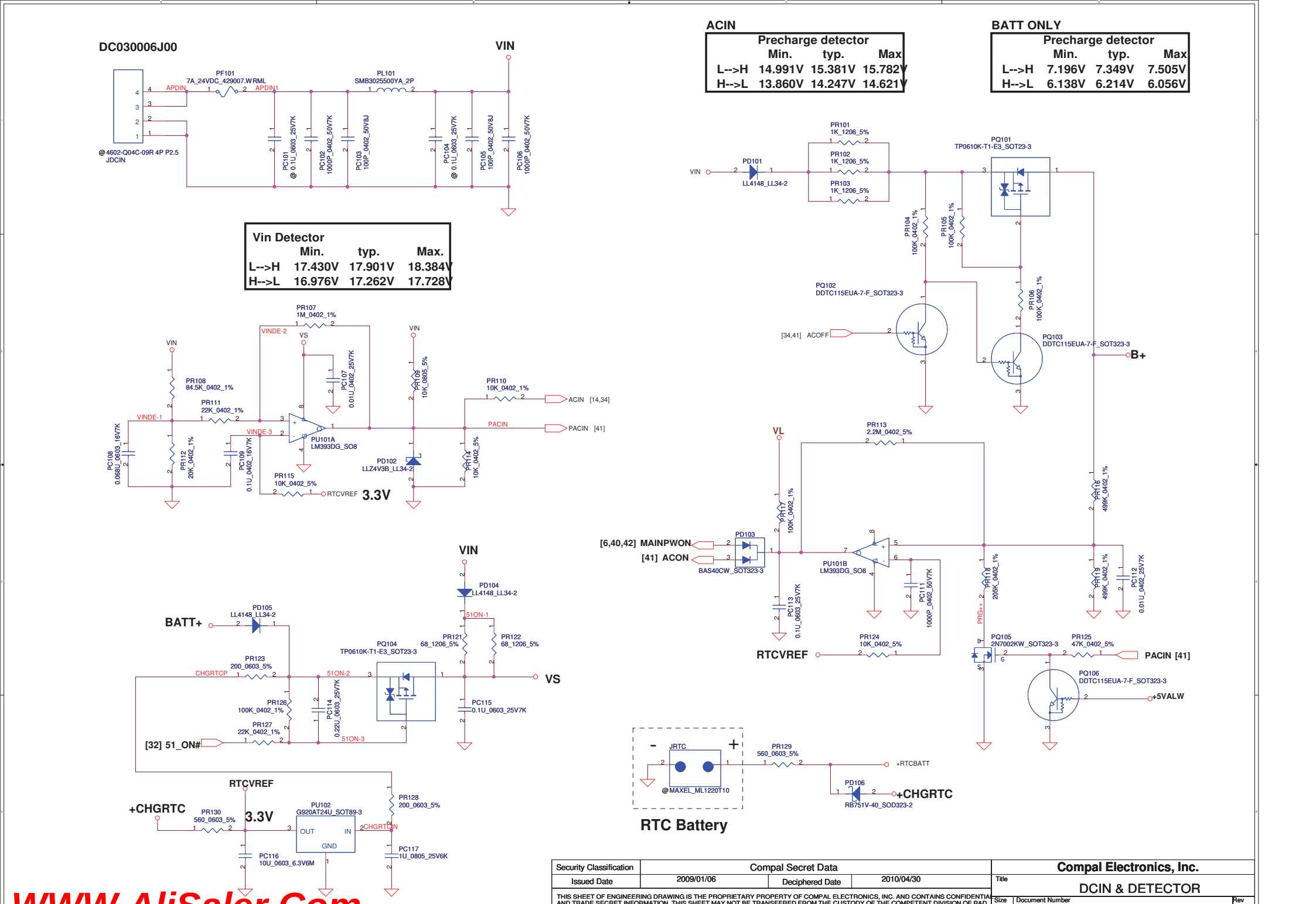

ACIN

Precharge detector	Min.	typ.	Max
L-->H	14.991V	15.381V	15.782V
H-->L	13.860V	14.247V	14.621V

BATT ONLY

Precharge detector	Min.	typ.	Max
L-->H	7.196V	7.349V	7.505V
H-->L	6.138V	6.214V	6.056V

Vin Detector

	Min.	typ.	Max.
L-->H	17.430V	17.901V	18.384V
H-->L	16.976V	17.262V	17.728V

Security Classification	Compal Secret Data		
Issued Date	2009/01/06	Deciphered Date	2010/04/30

THIS SHEET OF ENGINEERING DRAWING IS THE PROPRIETARY PROPERTY OF COMPAL ELECTRONICS, INC. AND CONTAINS CONFIDENTIAL AND TRADE SECRET INFORMATION. THIS SHEET MAY NOT BE TRANSFERED FROM THE CUSTODY OF THE COMPETENT DIVISION OF R&D DEPARTMENT EXCEPT AS AUTHORIZED BY COMPAL ELECTRONICS, INC. NEITHER THIS SHEET NOR THE INFORMATION IT CONTAINS MAY BE USED BY OR DISCLOSED TO ANY THIRD PARTY WITHOUT PRIOR WRITTEN CONSENT OF COMPAL ELECTRONICS, INC.

Compal Electronics, Inc.

Title: DCIN & DETECTOR

Size: Custom | Document Number: | Rev: 1.0

Date: Tuesday, May 18, 2010 | Sheet 39 of 48

WWW.AliSaler.Com

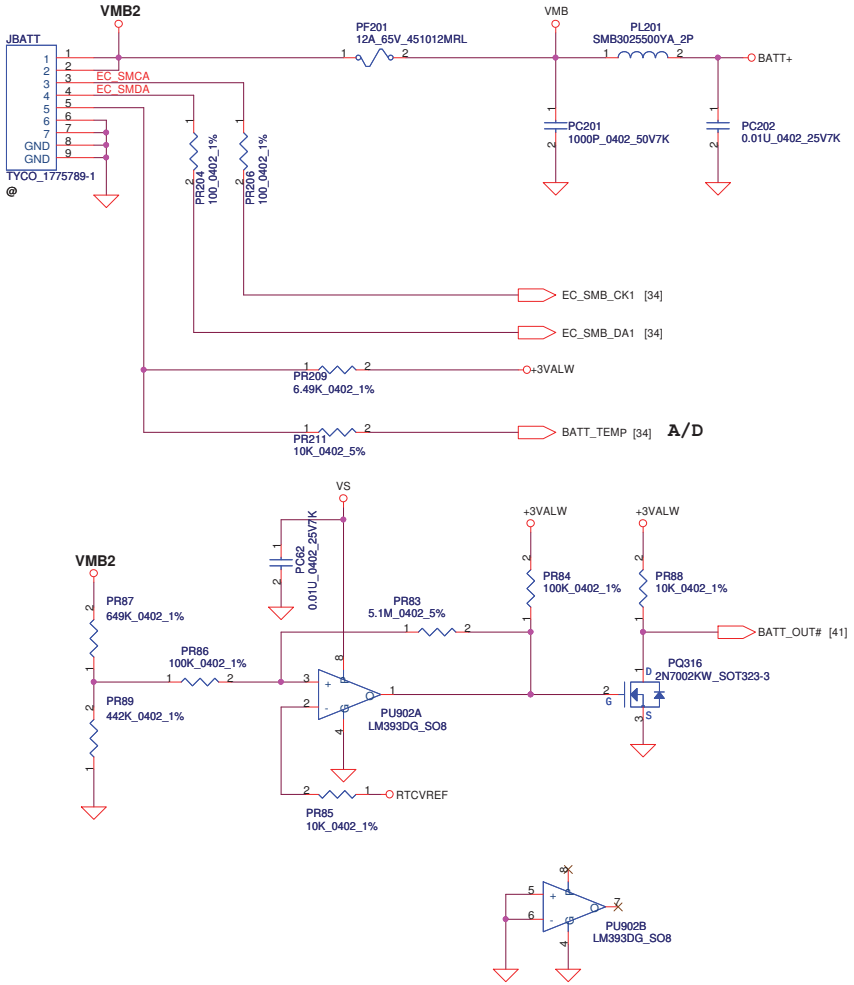

PH1 under CPU botten side :
CPU thermal protection at 92 degree C
Recovery at 56 degree C

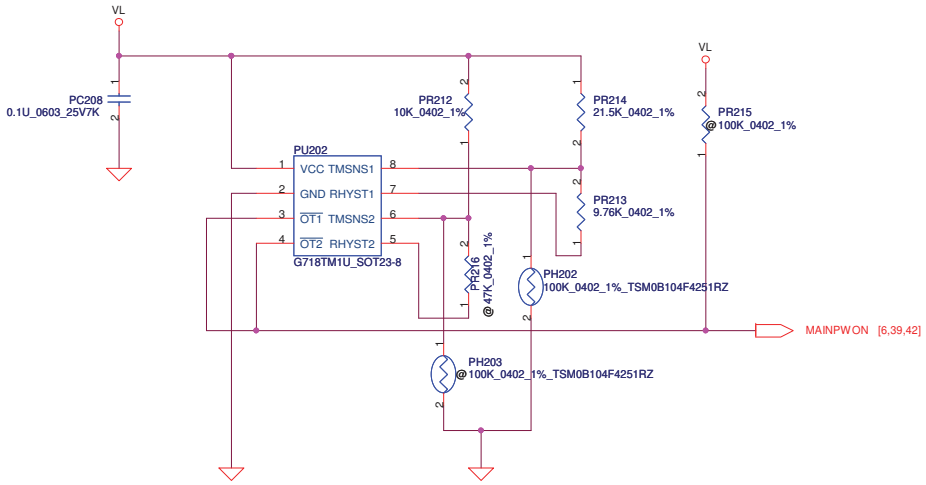

Security Classification	Compal Secret Data		
Issued Date	2009/01/06	Deciphered Date	2010/04/30

THIS SHEET OF ENGINEERING DRAWING IS THE PROPRIETARY PROPERTY OF COMPAL ELECTRONICS, INC. AND CONTAINS CONFIDENTIAL AND TRADE SECRET INFORMATION. THIS SHEET MAY NOT BE TRANSFERED FROM THE CUSTODY OF THE COMPETENT DIVISION OF R&D DEPARTMENT EXCEPT AS AUTHORIZED BY COMPAL ELECTRONICS, INC. NEITHER THIS SHEET NOR THE INFORMATION IT CONTAINS MAY BE USED BY OR DISCLOSED TO ANY THIRD PARTY WITHOUT PRIOR WRITTEN CONSENT OF COMPAL ELECTRONICS, INC.

Compal Electronics, Inc.

Title: BATTERY CONN / OTP

Size | Document Number | Rev 1.0

Date: Tuesday, May 18, 2010 | Sheet 40 of 48

WWW.AliSaler.Com

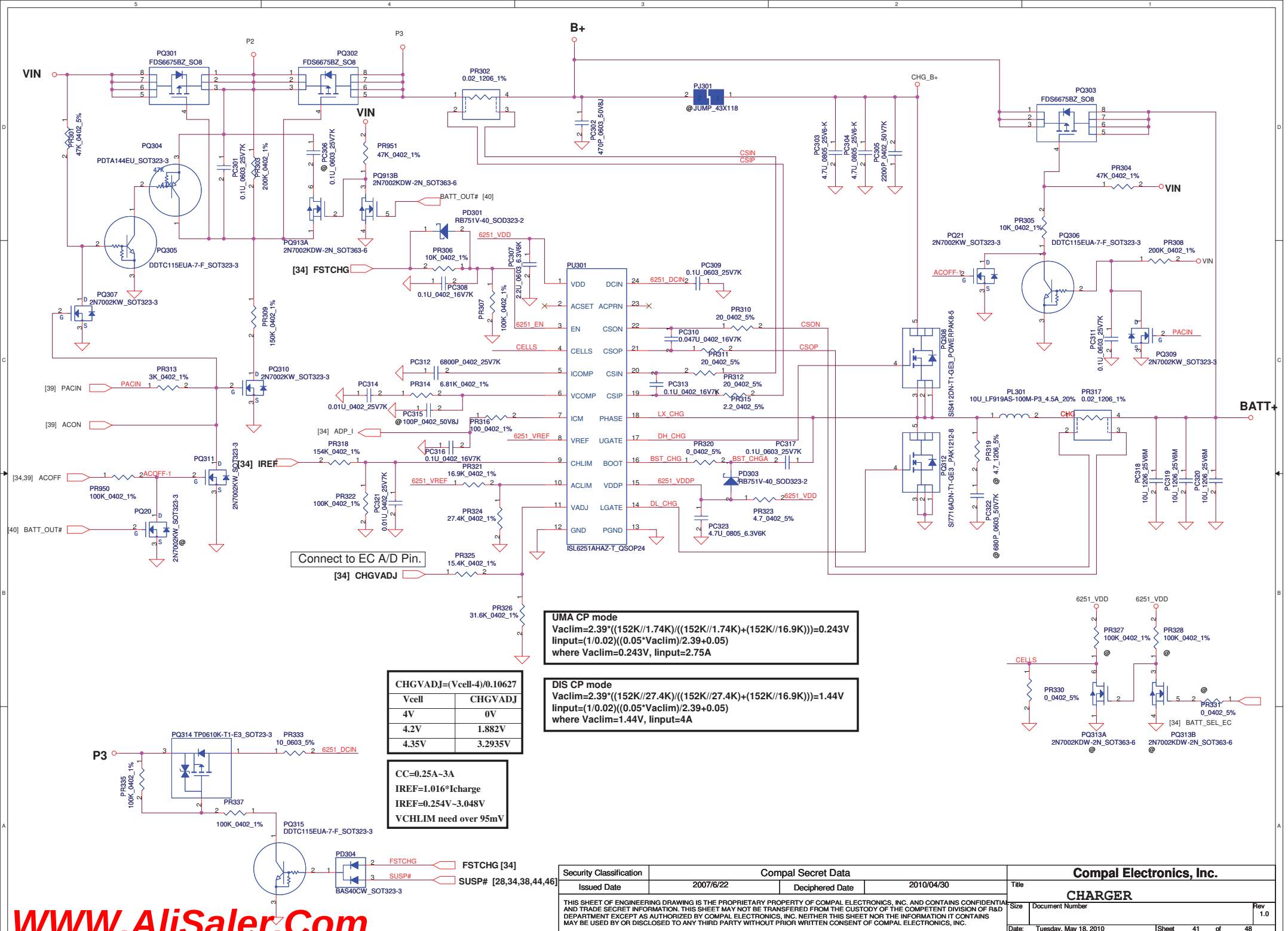

UMA CP mode
Vaclim=2.39*((152K//1.74K)/((152K//1.74K)+(152K//16.9K)))=0.243V
Iinput=(1/0.02)((0.05*Vaclim)/2.39+0.05)
where Vaclim=0.243V, Iinput=2.75A

DIS CP mode
Vaclim=2.39*((152K//27.4K)/((152K//27.4K)+(152K//16.9K)))=1.44V
Iinput=(1/0.02)((0.05*Vaclim)/2.39+0.05)
where Vaclim=1.44V, Iinput=4A

CHGVADJ=(Vcell-4)/0.10627

Vcell	CHGVADJ
4V	0V
4.2V	1.882V
4.35V	3.2935V

CC=0.25A~3A
IREF=1.016*Icharge
IREF=0.254V~3.048V
VCHLIM need over 95mV

Security Classification	Compal Secret Data		
Issued Date	2007/6/22	Deciphered Date	2010/04/30

THIS SHEET OF ENGINEERING DRAWING IS THE PROPRIETARY PROPERTY OF COMPAL ELECTRONICS, INC. AND CONTAINS CONFIDENTIAL AND TRADE SECRET INFORMATION. THIS SHEET MAY NOT BE TRANSFERED FROM THE CUSTODY OF THE COMPETENT DIVISION OF R&D DEPARTMENT EXCEPT AS AUTHORIZED BY COMPAL ELECTRONICS, INC. NEITHER THIS SHEET NOR THE INFORMATION IT CONTAINS MAY BE USED BY OR DISCLOSED TO ANY THIRD PARTY WITHOUT PRIOR WRITTEN CONSENT OF COMPAL ELECTRONICS, INC.

Compal Electronics, Inc.

Title: CHARGER

Size | Document Number | Rev 1.0

Date: Tuesday, May 18, 2010 | Sheet 41 of 48

WWW.AliSaler.Com

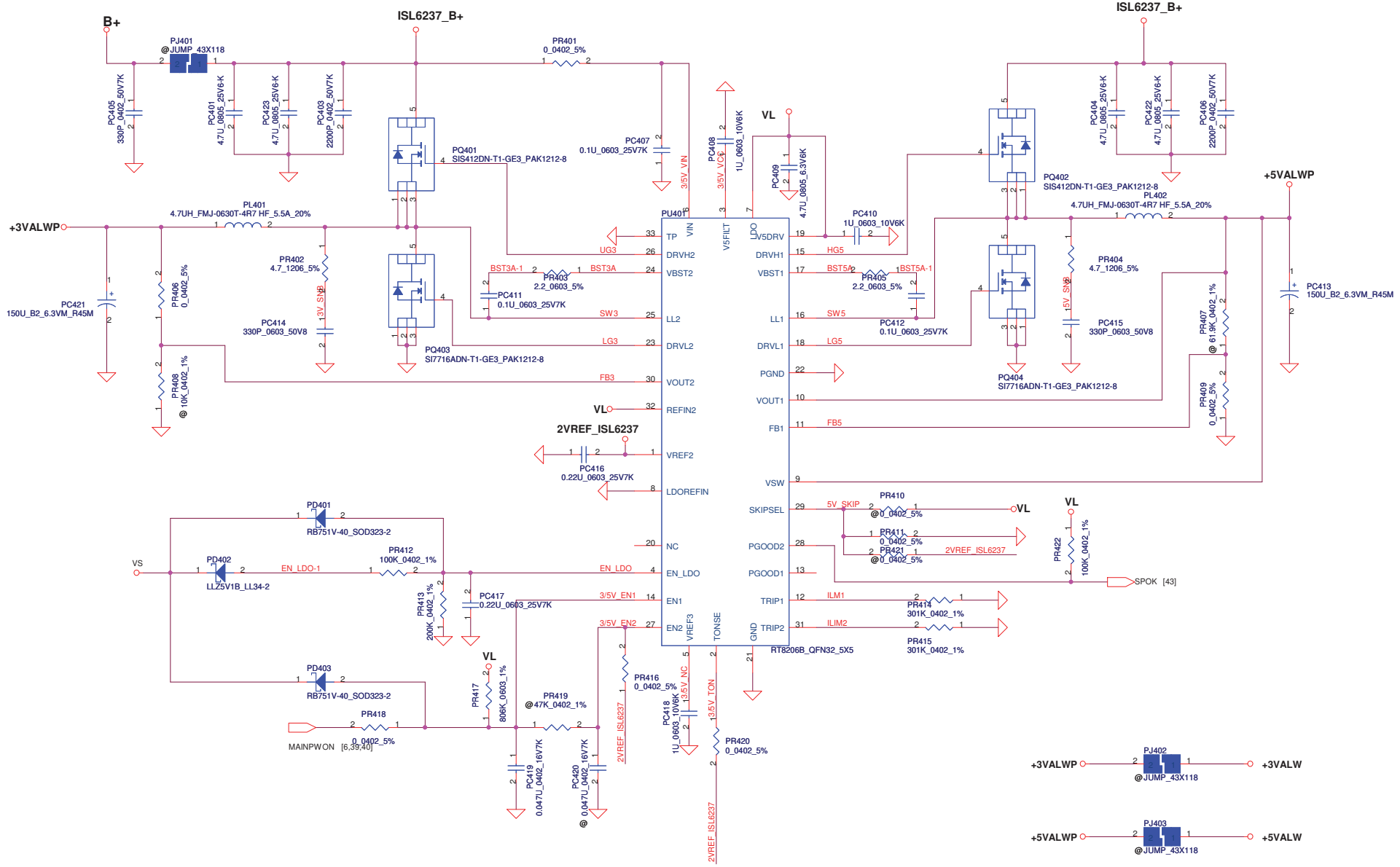

Security Classification	Compal Secret Data		
Issued Date	2009/01/06	Deciphered Date	2010/04/30

THIS SHEET OF ENGINEERING DRAWING IS THE PROPRIETARY PROPERTY OF COMPAL ELECTRONICS, INC. AND CONTAINS CONFIDENTIAL AND TRADE SECRET INFORMATION. THIS SHEET MAY NOT BE TRANSFERED FROM THE CUSTODY OF THE COMPETENT DIVISION OF R&D DEPARTMENT EXCEPT AS AUTHORIZED BY COMPAL ELECTRONICS, INC. NEITHER THIS SHEET NOR THE INFORMATION IT CONTAINS MAY BE USED BY OR DISCLOSED TO ANY THIRD PARTY WITHOUT PRIOR WRITTEN CONSENT OF COMPAL ELECTRONICS, INC.

Compal Electronics, Inc.

Title: 3VALW/5VALW

Size: Custom | Document Number | Rev: 1.0

Date: Tuesday, May 18, 2010 | Sheet 42 of 48

WWW.AliSaler.Com

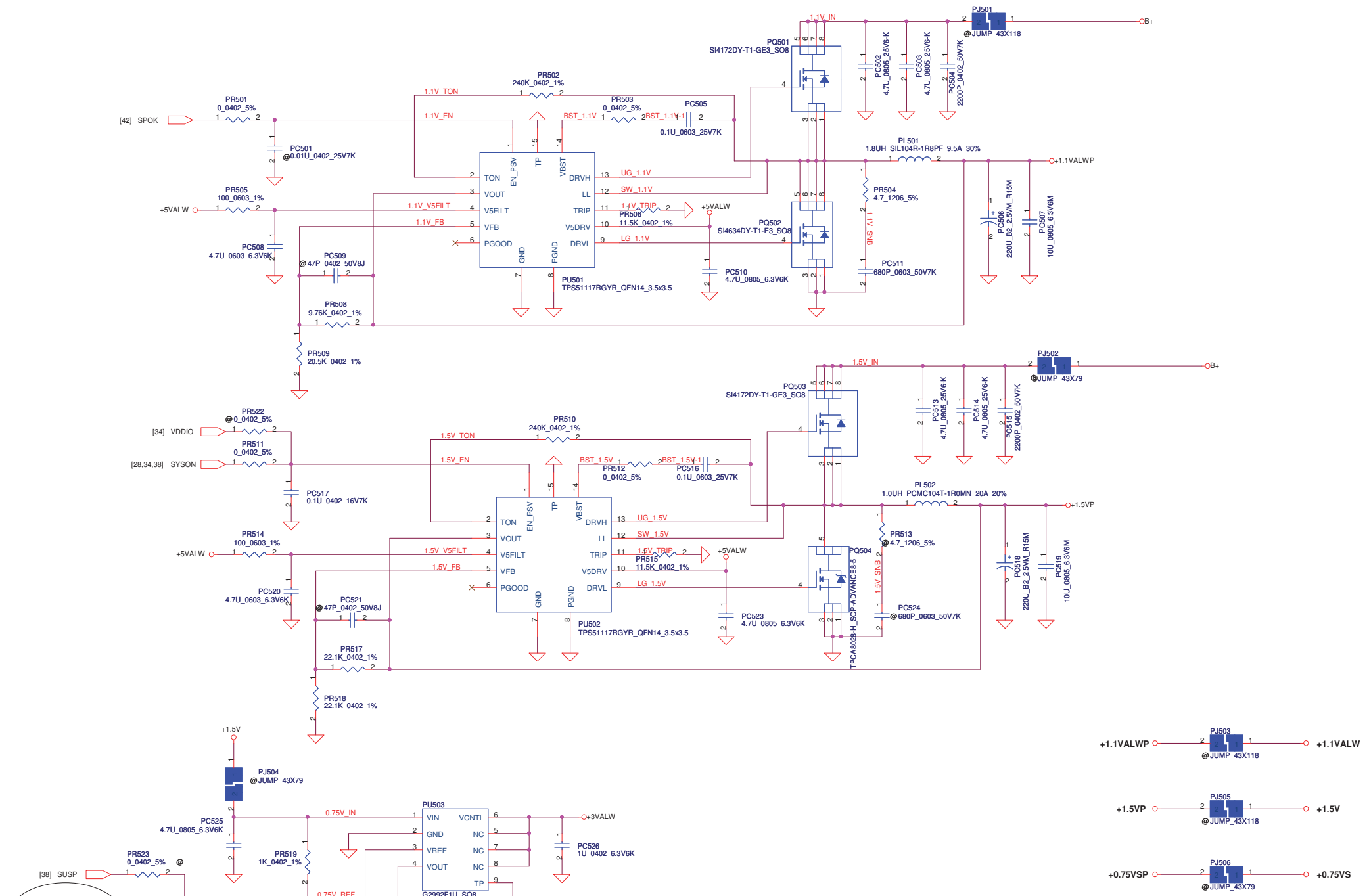

Security Classification	Compal Secret Data		
Issued Date	2009/01/06	Deciphered Date	2010/04/30

THIS SHEET OF ENGINEERING DRAWING IS THE PROPRIETARY PROPERTY OF COMPAL ELECTRONICS, INC. AND CONTAINS CONFIDENTIAL AND TRADE SECRET INFORMATION. THIS SHEET MAY NOT BE TRANSFERED FROM THE CUSTODY OF THE COMPETENT DIVISION OF R&D DEPARTMENT EXCEPT AS AUTHORIZED BY COMPAL ELECTRONICS, INC. NEITHER THIS SHEET NOR THE INFORMATION IT CONTAINS MAY BE USED BY OR DISCLOSED TO ANY THIRD PARTY WITHOUT PRIOR WRITTEN CONSENT OF COMPAL ELECTRONICS, INC.

Compal Electronics, Inc.

Title: 1.1V/1.5V/0.75V

Size | Document Number | Rev 1.0

Date: Tuesday, May 18, 2010 | Sheet 43 of 48

WWW.AliSaler.Com

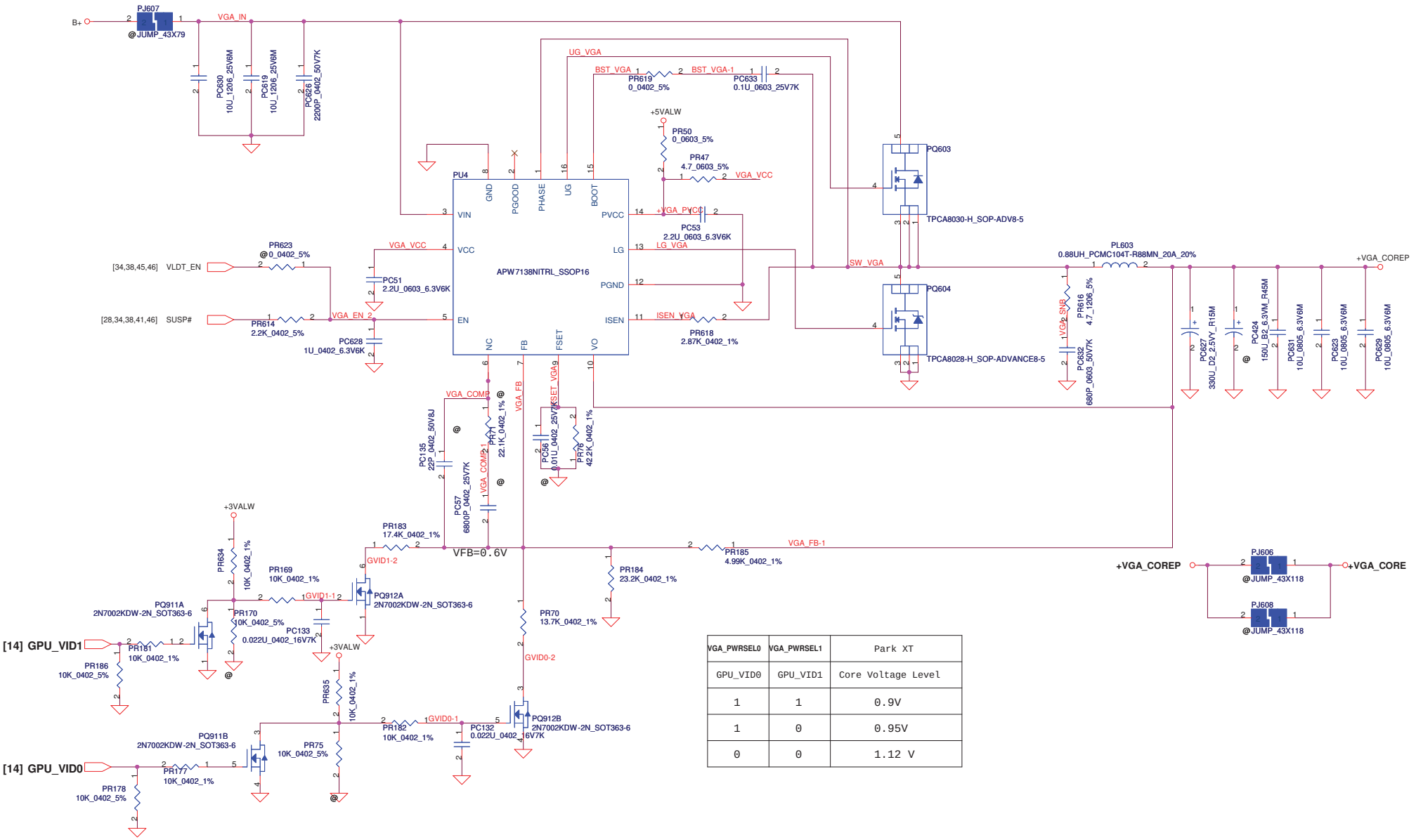

VGA_PWRSEL0	VGA_PWRSEL1	Park XT
GPU_VID0	GPU_VID1	Core Voltage Level
1	1	0.9V
1	0	0.95V
0	0	1.12 V

Security Classification	Compal Secret Data		
Issued Date	2009/01/06	Deciphered Date	2010/04/30

THIS SHEET OF ENGINEERING DRAWING IS THE PROPRIETARY PROPERTY OF COMPAL ELECTRONICS, INC. AND CONTAINS CONFIDENTIAL AND TRADE SECRET INFORMATION. THIS SHEET MAY NOT BE TRANSFERED FROM THE CUSTODY OF THE COMPETENT DIVISION OF R&D DEPARTMENT EXCEPT AS AUTHORIZED BY COMPAL ELECTRONICS, INC. NEITHER THIS SHEET NOR THE INFORMATION IT CONTAINS MAY BE USED BY OR DISCLOSED TO ANY THIRD PARTY WITHOUT PRIOR WRITTEN CONSENT OF COMPAL ELECTRONICS, INC.

Compal Electronics, Inc.

Title: 1.5V/VGA_CORE

Size | Document Number | Rev 1.0

Date: Tuesday, May 18, 2010 | Sheet 44 of 48

WWW.AliSaler.Com

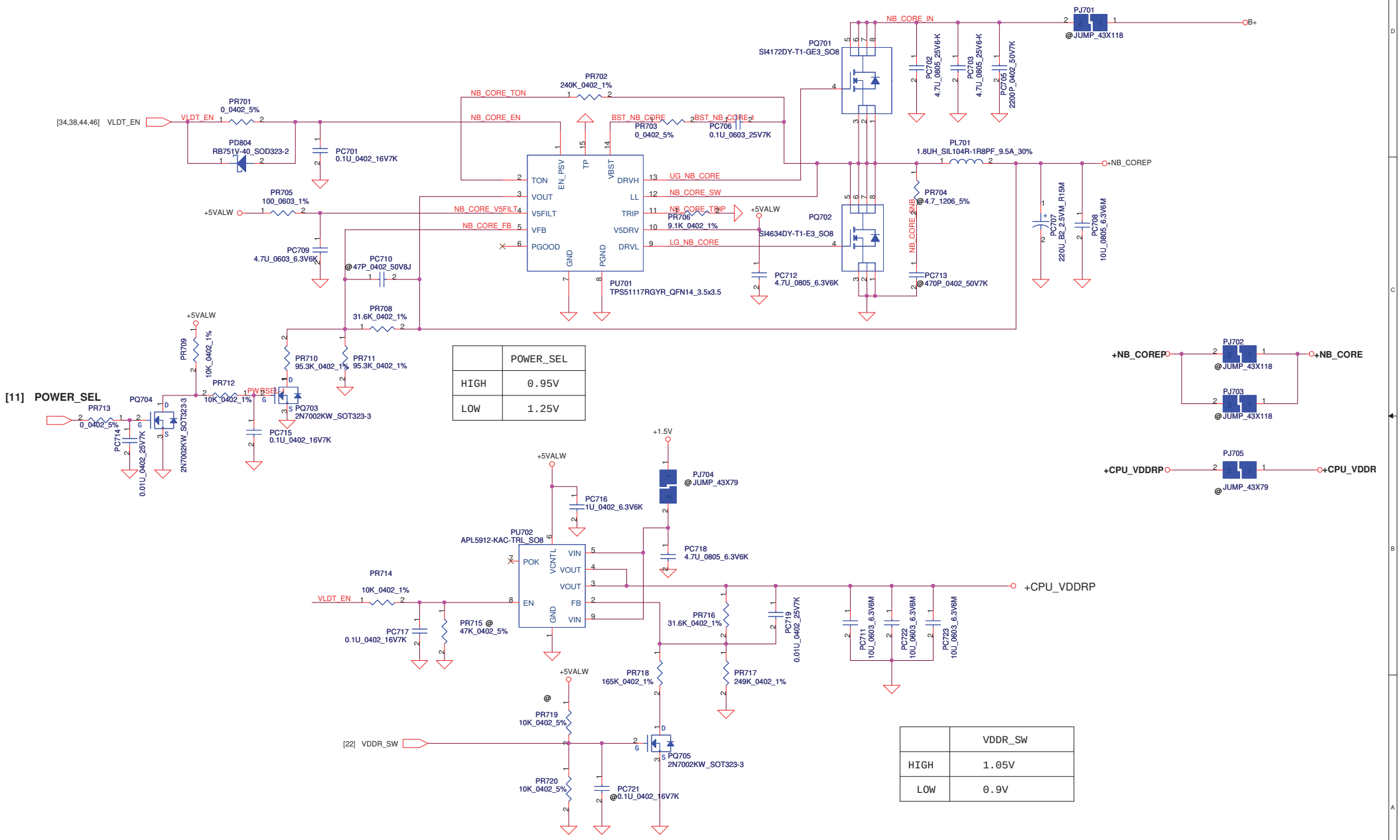

	POWER_SEL
HIGH	0.95V
LOW	1.25V

	VDDR_SW
HIGH	1.05V
LOW	0.9V

Security Classification	Compal Secret Data		
Issued Date	2009/01/06	Deciphered Date	2010/04/30

THIS SHEET OF ENGINEERING DRAWING IS THE PROPRIETARY PROPERTY OF COMPAL ELECTRONICS, INC. AND CONTAINS CONFIDENTIAL AND TRADE SECRET INFORMATION. THIS SHEET MAY NOT BE TRANSFERED FROM THE CUSTODY OF THE COMPETENT DIVISION OF R&D DEPARTMENT EXCEPT AS AUTHORIZED BY COMPAL ELECTRONICS, INC. NEITHER THIS SHEET NOR THE INFORMATION IT CONTAINS MAY BE USED BY OR DISCLOSED TO ANY THIRD PARTY WITHOUT PRIOR WRITTEN CONSENT OF COMPAL ELECTRONICS, INC.

Compal Electronics, Inc.

Title: +NB_CORE

Size: Custom | Document Number | Rev 1.0

Date: Tuesday, May 18, 2010 | Sheet 45 of 48

WWW.AliSaler.Com

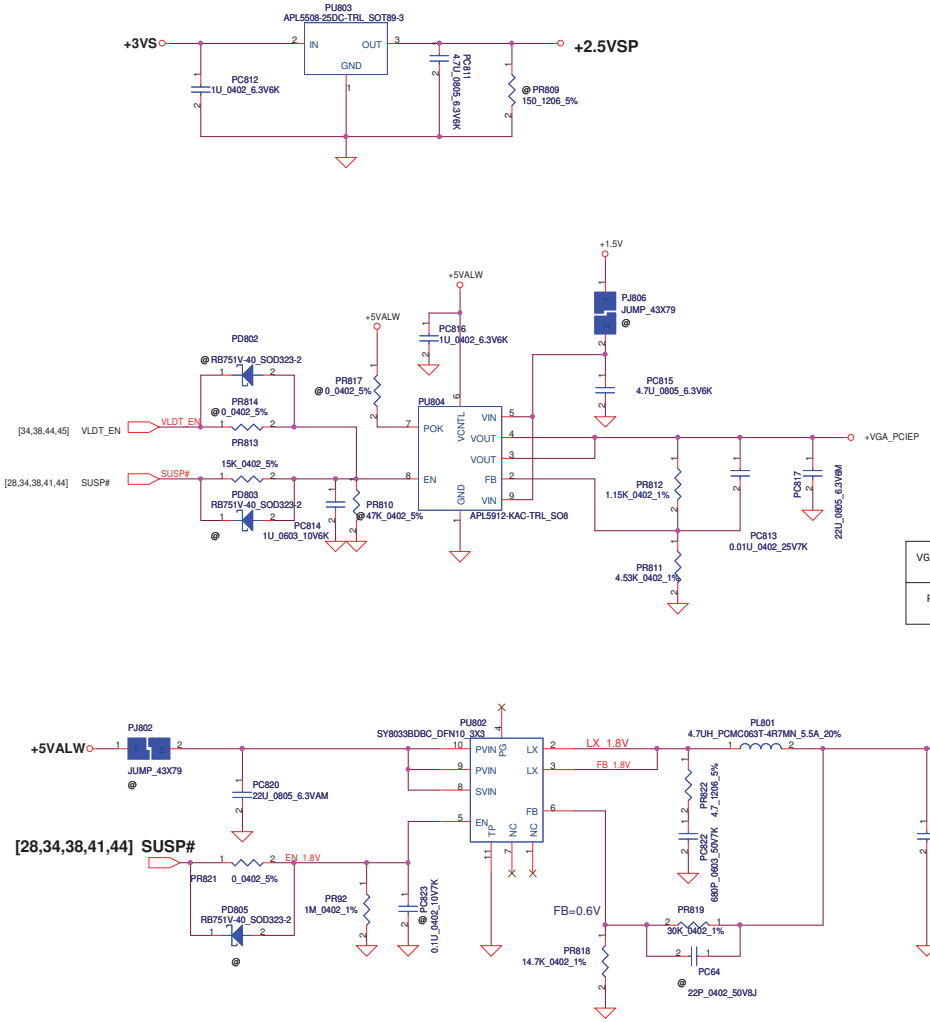

VGA_PCIE	1.0V	1.1 V
PR811	4.53K	3K

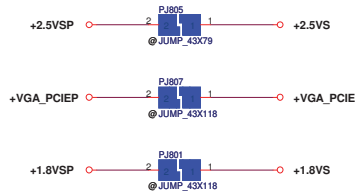

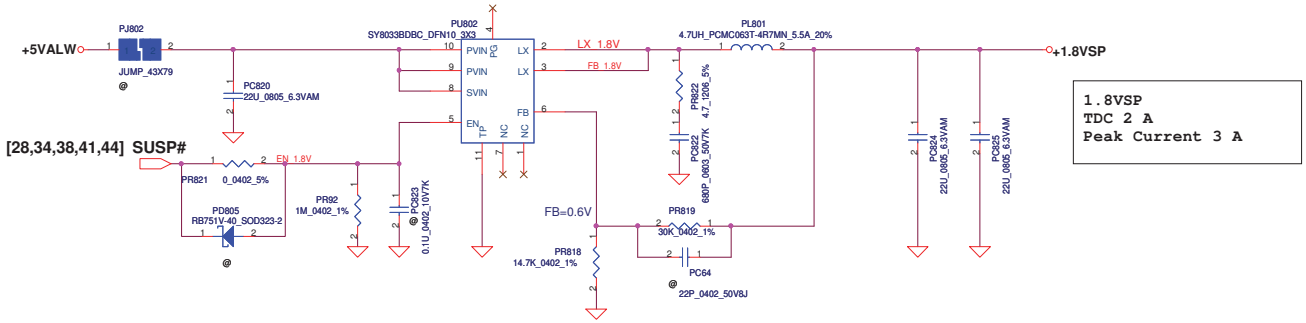

1.8VSP
TDC 2 A
Peak Current 3 A

Security Classification	Compal Secret Data		
Issued Date	2009/01/06	Deciphered Date	2010/04/30

THIS SHEET OF ENGINEERING DRAWING IS THE PROPRIETARY PROPERTY OF COMPAL ELECTRONICS, INC. AND CONTAINS CONFIDENTIAL AND TRADE SECRET INFORMATION. THIS SHEET MAY NOT BE TRANSFERED FROM THE CUSTODY OF THE COMPETENT DIVISION OF R&D DEPARTMENT EXCEPT AS AUTHORIZED BY COMPAL ELECTRONICS, INC. NEITHER THIS SHEET NOR THE INFORMATION IT CONTAINS MAY BE USED BY OR DISCLOSED TO ANY THIRD PARTY WITHOUT PRIOR WRITTEN CONSENT OF COMPAL ELECTRONICS, INC.

Compal Electronics, Inc.

Title: 2.5VS/PCIE/1.8VS

Size | Document Number | Rev 1.0

Date: Tuesday, May 18, 2010 | Sheet 46 of 48

WWW.AliSaler.Com

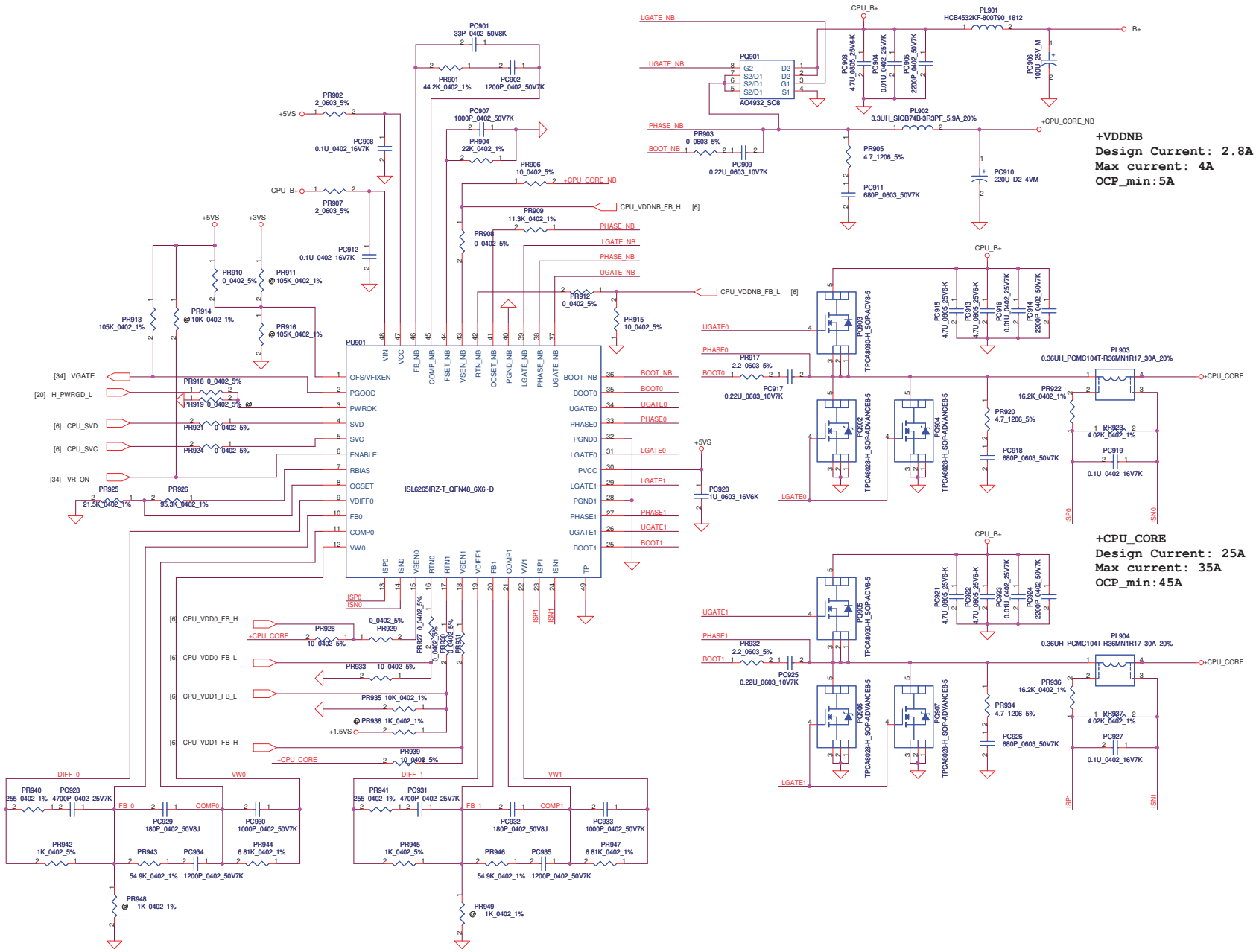

Security Classification	Compal Secret Data		
Issued Date	2009/01/06	Deciphered Date	2010/04/30

THIS SHEET OF ENGINEERING DRAWING IS THE PROPRIETARY PROPERTY OF COMPAL ELECTRONICS, INC. AND CONTAINS CONFIDENTIAL AND TRADE SECRET INFORMATION. THIS SHEET MAY NOT BE TRANSFERED FROM THE CUSTODY OF THE COMPETENT DIVISION OF R&D DEPARTMENT EXCEPT AS AUTHORIZED BY COMPAL ELECTRONICS, INC. NEITHER THIS SHEET NOR THE INFORMATION IT CONTAINS MAY BE USED BY OR DISCLOSED TO ANY THIRD PARTY WITHOUT PRIOR WRITTEN CONSENT OF COMPAL ELECTRONICS, INC.

Compal Electronics, Inc.

Title: **CPU_CORE**

Size | Document Number | Rev 1.0

Date: Tuesday, May 18, 2010 | Sheet 47 of 48

WWW.AliSaler.Com

Version change list (P.I.R. List)

Item	Fixed Issue	Reason for change	Rev.	PG#	Modify List	Date	Phase
1	Del NC parts	cpu internal sensor & debug port parts NC	0.2	6	Del U2,R41,R42,C22,Q2,Q3	2010-02-24	PVT_NAWE5
2	Add Park HDMI strap pin	DIS park HDMI abnomal	0.2	14	Add R120,121 (10k.0402)	2010-02-24	PVT_NAWE5
3	EMC1412-A address resister	Reserve thermal sensor address	0.2	14	Add R637 (4.7k.0402)	2010-02-24	PVT_NAWE5
4	change to Interanl clk GEN	modify Interanl clk PU resister	0.2	19	change R219,R220,R221,R222 Pin 2 from +3VS_CLK to +3VS	2010-02-24	PVT_NAWE5
5	change to Interanl clk GEN	using internal CLK GEN	0.2	19	Del EXT@ parts to INT@ parts	2010-02-24	PVT_NAWE5
6	change new card PCIE	new card pcie port from NB to SB	0.2	20	PCIE_SB_EXPCARD_TXP;PCIE_SB_EXPCARD_TXN PCIE_EXPCARD_SB_RXP;PCIE_EXPCARD_SB_RXN	2010-02-24	PVT_NAWE5
7	Reserve UMA/DIS HDMI strap pin	BIOS demand	0.2	21	add R366;R370 (10k,0402)	2010-02-24	PVT_NAWE5
8	new card function	ADD CPUSB# signal	0.2	21	add R545 (0R.0402)	2010-02-24	PVT_NAWE5
9	Change Cap footprint size	Change footprint for ME interfere	0.2	23	change C590,,C617,C618 from 10uF.0805 to 0603	2010-02-24	PVT_NAWE5
10	Change Cap footprint size	Change footprint for ME interfere	0.2	23	C591,C595,22uF Change to 10uF0603	2010-02-24	PVT_NAWE5
11	change R431 location	modify BKOFF# PD resister	0.2	27	R431 (10k.0402)	2010-02-24	PVT_NAWE5
12	Add LCD_ENVDD PD Resister	to prevent LCD flicker issue	0.2	27	add R432 (2.2k.0402)	2010-02-24	PVT_NAWE5
13	disable VARY_ BL Function	back light controll change to EC	0.2	27	add 451 (0ohm.0402) del R450;R452(0ohm.0402)	2010-02-24	PVT_NAWE5
14	Mimi card leakage issue	fix Intel WLAN card leagage issue	0.2	28	Add R719 (100k.0402) add R660;R661(100ohm.0402)	2010-02-24	PVT_NAWE5
15	reserve resister for Intel WLAN	for Intel WLAN LED use	0.2	28	add R658 (0ohm.0402)	2010-02-24	PVT_NAWE5
16	change CLKREQ_LAN# PU resister	flash Lan MAC sometime has fail	0.2	29	Add R254 (4.7k.0402) del R219 (8.2k.0402)	2010-02-24	PVT_NAWE5
17	Del LAN NC parts	disable EN_WOL# Function	0.2	29	del Q43,R274,C495,Q42,C496	2010-02-24	PVT_NAWE5
18	LAN Cystal accurate	modify cystal 25MHz of CAP	0.2	29	change C203,C202 from(27pF to 33pF.0402)	2010-02-24	PVT_NAWE5
19	codec common design	codec Internal MIC cap del	0.2	33	Add R612 (0ohm.0402) Del (C516 2.2uF.0603)	2010-02-24	PVT_NAWE5
20	KBC Cystal accurate	modify cystal 32.768KHz of CAP	0.2	34	change C730,C733 from(15pF to 27pF.0402)	2010-02-24	PVT_NAWE5
21	change ROM footprint	ROM pakage from 150mil to 200mil	0.2	36	change U30 pakage size	2010-02-24	PVT_NAWE5
22	BT_LED controll	BT_LED no need diode	0.2	36	Del D20	2010-02-24	PVT_NAWE5
23	leakage issue	fix +3VS leakage	0.2	38	Del R627 (100k,0402) add R110 (100k,0402)	2010-02-24	PVT_NAWE5
24	Disable discharge circuit	NC discharge circuit parts	0.2	38	del R620,Q50,R626,Q54,R622,Q53,R313,Q14,R638,Q73, R269,Q29,R631,Q67,R635,Q70,R616,Q60,R617,Q61, R636,Q71,R605,Q56,R404,R624,Q55,R629,Q66	2010-02-24	PVT_NAWE5
25	Del L28 220 ohm bead	NC part	1.0	12	del L28	2010-02-24	MP_NAWE5
26	Del test Resister	Del test 0 ohm Resister	1.0	23,28, 32,35	R447;R4448;R586;R662;R646;R440,R372,R373,R374,R375	2010-04-28	MP_NAWE5
27	Reserve JP6 for LED of Num/Cap	For NAWE7 power b/d co-lay	1.0	38	Add JP6 Location,ADD R637 100k ohm	2010-04-28	MP_NAWE5
28	ADD R430 0ohm , Del U21	reserve RST_buffer	1.0	20	ADD R430 , Del U21	2010-04-28	MP_NAWE5
29	For VGA timing	for VGA timing delay +1.8VS	1.0	38	Change R489 from 84.5K to 100K	2010-04-28	MP_NAWE5
30	Add C652 & C653 33pF	EMI demand	1.0	32	Add C652 & C653 33pF	2010-04-28	MP_NAWE5
31	Change C189 from 330uF to 220uF	change +NB_CORE CAP	1.0	12	Change C189 from 330uF to 220uF	2010-04-28	MP_NAWE5

WWW.AliSaler.Com

Security Classification	Compal Secret Data		
Issued Date	2007/09/20	Deciphered Date	2010/04/30

THIS SHEET OF ENGINEERING DRAWING IS THE PROPRIETARY PROPERTY OF COMPAL ELECTRONICS, INC. AND CONTAINS CONFIDENTIAL AND TRADE SECRET INFORMATION. THIS SHEET MAY NOT BE TRANSFERED FROM THE CUSTODY OF THE COMPETENT DIVISION OF R&D DEPARTMENT EXCEPT AS AUTHORIZED BY COMPAL ELECTRONICS, INC. NEITHER THIS SHEET NOR THE INFORMATION IT CONTAINS MAY BE USED BY OR DISCLOSED TO ANY THIRD PARTY WITHOUT PRIOR WRITTEN CONSENT OF COMPAL ELECTRONICS, INC.

Compal Electronics, Inc.

Title	PIR (HW)	
Size Custom	Document Number NAWE5 LA-5753P	Rev 1.A
Date: Tuesday, May 18, 2010	Sheet 48 of 48	